K-DRG MULTIFIX MINI

Pressure regulators

Lastnosti

vstopni tlak	Max. 16 bar
temperatura medija	max. 60 °C
temperatura okolice	Max. 60 °C
tesnilni material	NBR
vzmetni pokrov	POM-brass
ohišje	Die-cast zinc
meritev pretoka	At P1 = 8 bar, P2 = 6 bar and pressure drop Δp = 1 bar



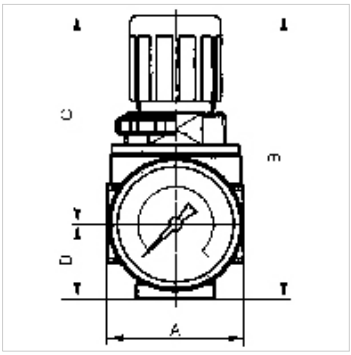

Navodilo

Drugi podatki na zahtevo.

Opis

Reversible diaphragm pressure regulators, independent of inlet pressure, with self-relieving design. The pressure setting can be locked by pushing the button down.

Navodila za naročanje

Lockable pressure regulators: K-07250001 and K-07250007 (prices on request). If several devices in the »multifix-mini« Series are assembled together, the maximum working pressure is 12 bar.

Artikel

Opis	Navoj	regulacijsko območje	pretok (L/min)	A (mm)	B	C (mm)	D (mm)	DN	Velikost
K- 07 25 00 03	G 1/8	0.1 - 3 bar	1100	40,0	85,0 mm	63,0	22,0	5	0
K- 07 25 00 04	G 1/8	0.2 - 6 bar	1100	40,0	85,0 mm	63,0	22,0	5	0
K- 07 25 00 01	G 1/8	0.5 - 10 bar	1100	40,0	85,0 mm	63,0	22,0	5	0
K- 07 25 00 02	G 1/8	0.5 - 16 bar	1100	40,0	85,0 mm	63,0	22,0	5	0
K- 07 25 00 05	G 1/4	0.1 - 3 bar	1100	40,0	85,0 mm	63,0	22,0	5	0
K- 07 25 00 06	G 1/4	0.2 - 6 bar	1100	40,0	85,0 mm	63,0	22,0	5	0
K- 07 25 00 07	G 1/4	0.5 - 10 bar	1100	40,0	85,0 mm	63,0	22,0	5	0

Nadomestni deli

K-HALTERBAUSATZ	Holder
K-SCHALTTAFELMUTTER	Nut
K-KOPPELPAKET MEHR	Coupling packet
K-VERSCHLEI-SATZ	Set of wearing parts

Kljub skrbnemu preverjanju napak ne moremo izključiti in za informacije, ki so tu navedene, ne prevzemamo nobene odgovornosti.