K-DRG DRVS MULTIFIX MINI

Pressure regulators with pressure supply at both ends

Lastnosti

vstopni tlak	Max. 16 bar
temperatura medija	max. 60 °C
temperatura okolice	Max. 60 °C
tesnilni material	NBR
vzmetni pokrov	POM-brass
ohišje	Die-cast zinc
meritev pretoka	At P1 = 8 bar, P2 = 6 bar and pressure drop Δp = 1 bar



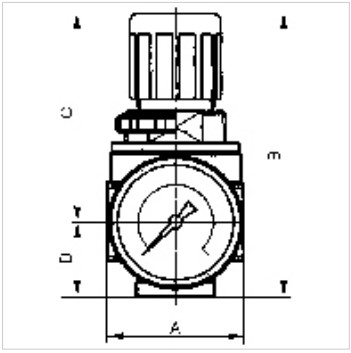

Navodilo

Drugi podatki na zahtevo.

Opis

Diaphragm pressure regulators with self-relieving design for mounting side by side. The pressure setting can be locked by pushing the button down.
By assembling two or more controllers together, it is possible to supply several working air circuits with different output pressures via a single supply line.

Navodila za naročanje

The port for the output pressure (P2) is on the rear! K-07250028: G 1/8. Lockable pressure regulator: K-07250027. If several devices in the »multifix-mini« Series are assembled together, the maximum working pressure is 12 bar.

Artikel

Opis	Navoj	regulacijsko območje	pretok (L/min)	A (mm)	B	C (mm)	D (mm)	DN	Velikost
K- 07 25 00 28	G 1/4	0.1 - 3 bar	1200	40,0	85,0 mm	63,0	22,0	5	0
K- 07 25 00 29	G 1/4	0.2 - 6 bar	1200	40,0	85,0 mm	63,0	22,0	5	0
K- 07 25 00 27	G 1/4	0.5 - 10 bar	1200	40,0	85,0 mm	63,0	22,0	5	0

Nadomestni deli

K-HALTERBAUSATZ	Holder
K-SCHALTTAFELMUTTER	Nut
K-KOPPELPAKET MEHR	Coupling packet
K-VERSCHLEI-SATZ	Set of wearing parts

Kljub skrbnemu preverjanju napak ne moremo izključiti in za informacije, ki so tu navedene, ne prevzemamo nobene odgovornosti.