K-WTEH 2-TLG PC MULTIFIX MINI

Service units, 2-piece with polycarbonate bowl

Lastnosti

vstopni tlak	Max. 12 bar (also for metal tank!)
temperatura medija	max. 60 °C
temperatura okolice	Max. 60 °C
velikost por v filtrirnem elementu	5 µm
tesnilni material	NBR
vzmetni pokrov	POM-brass
ohišje	Die-cast zinc
kapalni nastavek	PA (polycarbonate bowl), Zinc-glass-NBR (metal bowl)
Drain valve	Semi-automatic
meritev pretoka	At P1 = 8 bar, P2 = 6 bar and pressure drop Δp = 1 bar



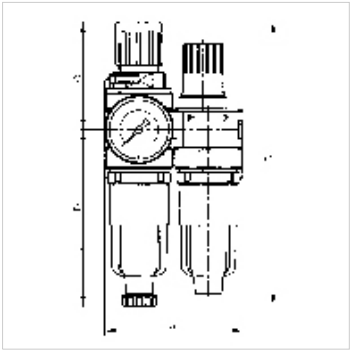

Navodilo

Drugi podatki na zahtevo.

Opis

Two or three-piece service units consisting of a diaphragm pressure regulator, independent of inlet pressure, with self-relieving design, combined with a centrifugal separator and a proportional lubricator.

Navodila za naročanje

Lockable service units available on request. If several devices in the »multifix-mini« Series are assembled together, the maximum working pressure is 12 bar.

Artikel

Opis	Navoj	regulacijsko območje	pretok (L/min)	A (mm)	B	C (mm)	D (mm)	DN	Velikost
K- 07 25 01 25	G 1/8	0.5 - 10 bar	700	80,0	165,5 mm	63,0	102,5	5	0
K- 07 25 01 27	G 1/4	0.5 - 10 bar	700	80,0	165,5 mm	63,0	102,5	5	0

Nadomestni deli

K-HALTERBAUSATZ	Holder
K-AUTOMAT ABLASSVENTIL	Automatic drain valve
K-SCHALTTAFELMUTTER	Nut
K-KOPPELPAKET MEHR	Coupling packet
K-PC-BEHAELTER FILTER MULTIFIX	Polycarbonate tank filter
K-ERSATZBEHAELTER MULTI MINI	Spare tank »multifix-mini« & »standard-mini«
K-FILTERELEMENT	Filter element
K-VERSCHLEI-SATZ	Set of wearing parts
K-TROPFAUFSATZ POLYCARBO 1	Drip attachment polycarbonate
K-TROPFAUFSATZ METALL	Drip attachment metal

Kljub skrbnemu preverjanju napak ne moremo izključiti in za informacije, ki so tu navedene, ne prevzemamo nobene odgovornosti.