K-DRG SCHALTTAFELEINBAU STANDARD

Pressure regulators

HANSA FLEX

Lastnosti

vstopni tlak	Max. 16 bar K-07250359 - K-07250366), max. 25 bar (K-07250367 - K-07250378)
temperatura medija	max. 60 °C
temperatura okolice	Max. 80 °C
tesnilni material	NBR
ohišje	Die-cast zinc, painted silver
meritev pretoka	At P1 = 8 bar, P2 = 6 bar and pressure drop Δp = 1 bar
drugi podatki	User manual on request



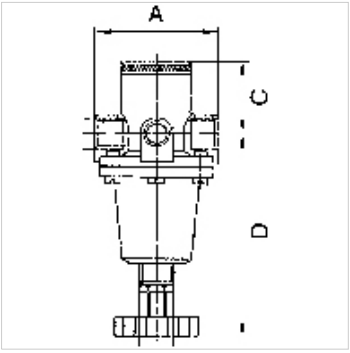

Opis

- incl. panel nut and washer -, Reversible diaphragm pressure regulators, independent of inlet pressure, with self-relieving design.

Artikel

Opis	Navoj	regulacijsko območje	pretok (L/min)	A (mm)	C (mm)	D (mm)	DN	navoj stikalne plošče
K- 07 25 03 59	G 1/4	0.5 - 3 bar	1000	54,0	32,0	97,5	6	M 20 x 1.5
K- 07 25 03 60	G 1/4	0.5 - 6 bar	1000	54,0	32,0	97,5	6	M 20 x 1.5
K- 07 25 03 61	G 1/4	0.5 - 10 bar	1000	54,0	32,0	97,5	6	M 20 x 1.5
K- 07 25 03 62	G 1/4	0.5 - 16 bar	1000	54,0	32,0	97,5	6	M 20 x 1.5
K- 07 25 03 63	G 3/8	0.5 - 3 bar	1000	54,0	32,0	97,5	6	M 20 x 1.5
K- 07 25 03 64	G 3/8	0.5 - 6 bar	1000	54,0	32,0	97,5	6	M 20 x 1.5
K- 07 25 03 65	G 3/8	0.5 - 10 bar	1000	54,0	32,0	97,5	6	M 20 x 1.5
K- 07 25 03 66	G 3/8	0.5 - 16 bar	1000	54,0	32,0	97,5	6	M 20 x 1.5
K- 07 25 03 67	G 1/2	0.1 - 3 bar	2200	70,0	34,0	111,9	15	M 20 x 1.5
K- 07 25 03 68	G 1/2	0.5 - 6 bar	2200	70,0	34,0	111,9	15	M 20 x 1.5
K- 07 25 03 69	G 1/2	0.5 - 10 bar	2200	70,0	34,0	111,9	15	M 20 x 1.5
K- 07 25 03 70	G 1/2	0.5 - 16 bar	2200	70,0	34,0	111,9	15	M 20 x 1.5
K- 07 25 03 71	G 3/4	0.1 - 3 bar	5000	90,0	31,0	132,4	20	M 20 x 1.5
K- 07 25 03 72	G 3/4	0.5 - 6 bar	5000	90,0	31,0	132,4	20	M 20 x 1.5
K- 07 25 03 73	G 3/4	0.5 - 10 bar	5000	90,0	31,0	132,4	20	M 20 x 1.5
K- 07 25 03 74	G 3/4	0.5 - 16 bar	5000	90,0	31,0	132,4	20	M 20 x 1.5
K- 07 25 03 75	G 1	0.1 - 3 bar	5000	90,0	31,0	132,4	25	M 20 x 1.5
K- 07 25 03 76	G 1	0.5 - 6 bar	5000	90,0	31,0	132,4	25	M 20 x 1.5
K- 07 25 03 77	G 1	0.5 - 10 bar	5000	90,0	31,0	132,4	25	M 20 x 1.5
K- 07 25 03 78	G 1	0.5 - 16 bar	5000	90,0	31,0	132,4	25	M 20 x 1.5

Nadomestni deli

K-HALTERBAUSATZ STANDARD	Holder
K-VERSCHLEI-SATZ	Set of wearing parts
K-LOESBARE DOPPELNIPPEL MS	Double nipples
K-XV AGM MS NI	Double nipples, parallel male thread, nickel-plated brass

Kljub skrbnemu preverjanju napak ne moremo izključiti in za informacije, ki so tu navedene, ne prevzemamo nobene odgovornosti.