K-FI PC-BEHAELTER H ABLV STANDARD

Filters with polycarbonate bowl and semi-automatic drain valve

Lastnosti

vstopni tlak	Max. 16 bar (polycarbonate bowl / bowl guard), Max. 25 bar (metal bowl)
temperatura medija	max. 60 °C
temperatura okolice	Max. 60 °C
velikost por v filtrirnem elementu	5 µm (Size 1 / Size 3), 40 µm (Size 2 / Size 4), 60 µm (Size 5)
ohišje	Die-cast zinc, painted silver
meritev pretoka	At P2 = 6 bar and pressure drop Δp = 1 bar
drugi podatki	User manual on request



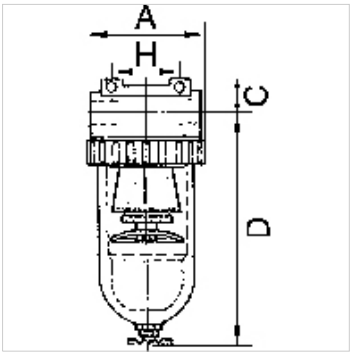

Navodilo

G 2 1/2 and G 3 filters available on request

Opis

Centrifugal separators with a sintered filter element.

Artikel

Opis	Navoj	pretok (L/min)	A (mm)	C (mm)	D (mm)	DN	H (mm)
K- 07 25 05 85	G 1/4	800	48,0	14,0	131,6	6	38,0
K- 07 25 05 88	G 3/8	800	48,0	14,0	131,6	6	38,0
K- 07 25 05 91	G 3/8	3100	70,0	16,0	145,7	10	50,0
K- 07 25 05 94	G 1/2	4000	79,0	18,0	168,4	15	50,0
K- 07 25 05 97	G 3/4	4000	102,0	26,5	169,9	20	50,0
K- 07 25 06 00	G 1	4000	90,0	26,5	169,9	25	50,0
K- 07 25 06 03	G 1 1/4	12500	125,0	36,5	243,4	40	105,0
K- 07 25 06 06	G 1 1/2	12500	125,0	36,5	243,4	45	105,0

Nadomestni deli

K-HALTERBAUSATZ STANDARD	Holder
K-FILTERELEMENT	Filter element
K-SCHUTZKORB G	Protective cage
K-AUTOMAT ABLASSVENTIL	Automatic drain valve
K-XV AGM MS NI	Double nipples, parallel male thread, nickel-plated brass
K-LOESBARE DOPPELNIPPEL MS	Double nipples
K-ABLASSVENTIL AUTO	Fully-automatic drain valve with Adapter G 1/8

Kljub skrbnemu preverjanju napak ne moremo izključiti in za informacije, ki so tu navedene, ne prevzemamo nobene odgovornosti.