K-WTEH KOMBI PC-BEHAELTER S H ABLV

Combination service units with polycarbonate bowl, bowl guard and manual drain valve

Lastnosti

vstopni tlak	Max. 16 bar (polycarbonate bowl), Max. 25 bar (metal bowl)
temperatura medija	max. 50 °C
temperatura okolice	Max. 50 °C
velikost por v filtrirnem elementu	50 µm
tesnilni material	NBR
ohišje	Die-cast zinc, Spring bonnet; PA
kapalni nastavek	PA
meritev pretoka	At P1 = 8 bar, P2 = 6 bar and pressure drop Δp = 1 bar



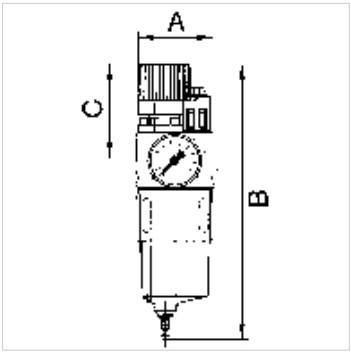

Navodilo

Drugi podatki na zahtevo.

Opis

A filter, pressure regulator and oil-mist lubricator combined in a single device with an extremely compact design. The pressure setting can be locked by pushing the knob down. Oil can be filled under pressure.

Artikel

Opis	Navoj	regulacijsko območje	pretok (L/min)	A (mm)	B	C (mm)
K- 07 25 08 45	G 1/4	0.5 - 10 bar	1400	67,0	217,0 mm	68,5
K- 07 25 08 47	G 1/4	0.5 - 16 bar	1000	67,0	217,0 mm	68,5
K- 07 25 08 49	G 3/8	0.5 - 10 bar	1400	67,0	217,0 mm	68,5
K- 07 25 08 51	G 3/8	0.5 - 16 bar	1000	67,0	217,0 mm	68,5
K- 07 25 08 53	G 1/2	0.5 - 10 bar	1400	65,0	217,0 mm	68,5
K- 07 25 08 55	G 1/2	0.5 - 16 bar	1000	65,0	217,0 mm	68,5
K- 07 25 08 57	G 3/4	0.5 - 10 bar	3400	97,0	296,5 mm	96,5
K- 07 25 08 59	G 3/4	0.5 - 16 bar	2800	97,0	296,5 mm	96,5
K- 07 25 08 61	G 1	0.5 - 10 bar	3400	93,0	296,5 mm	96,5
K- 07 25 08 63	G 1	0.5 - 16 bar	2800	93,0	296,5 mm	96,5

Nadomestni deli

K-HALTERBAUSATZ SERIE 81	Holder for series 81
K-ERSATZBEHAEL KOMBI	Spare tank
K-SCHUTZKORB G	Protective cage
K-VERSCHLEI-SATZ	Set of wearing parts
K-TROPFAUFSATZ POLYCARBO	Drip attachment polycarbonate
K-TROPFAUFSATZ METALL	Drip attachment metal
K-FILTERELEMENT	Filter element
K-ABLASSVENTIL AUTO	Fully-automatic drain valve with Adapter G 1/8
K-RD NIPPEL KURZ 1	Reducing nipples, short type
K-XV AGM 2	Double nipples, parallel male thread

Kljub skrbnemu preverjanju napak ne moremo izključiti in za informacije, ki so tu navedene, ne prevzemamo nobene odgovornosti.