# K-FI SPEZI PC-BEHAEL H K STANDARD

Special filters with polycarbonate bowl and bowl guard, with semi-automatic drain valve to G 1/2 and manual drain valve from G 3/4

HANSA FLEX

## Lastnosti

| | |
|---|---|
| **vstopni tlak** | Max. 16 bar (polycarbonate bowl / bowl guard), Max. 25 bar (metal bowl) |
| **temperatura medija** | max. 50 °C |
| **temperatura okolice** | Max. 50 °C |
| **izkoristek** | 99.999 % |
| **velikost por v filtrirnem elementu** | 0.01 µm |
| **ohišje** | Die-cast zinc, painted silver |
| **meritev pretoka** | At P2 = 6 bar and pressure drop Δp = 1 bar |

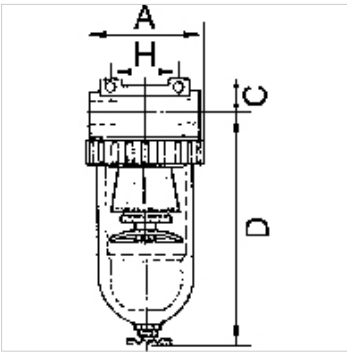


## Navodilo

Drugi podatki na zahtevo.

## Opis

For all applications with particularly strict compressed air purity requirements. The separating efficiency of these filters permits very fine oil vapour particles and micro-fine suspended particles to be filtered. A standard filter should always be connected upstream to trap coarse impurities and protect the micro-filter inserts.

## Artikel

| Opis | Navoj | pretok (L/min) | A (mm) | C (mm) | D (mm) | H (mm) | DN |
|---|---|---|---|---|---|---|---|
| **K- 07 25 10 75** | G 1/4 | 380 | 48,0 | 14,0 | 131,6 | 38,0 | 6 |
| **K- 07 25 10 78** | G 3/8 | 380 | 48,0 | 14,0 | 131,6 | 38,0 | 6 |
| **K- 07 25 10 80** | G 3/8 | 720 | 70,0 | 16,0 | 145,7 | 50,0 | 10 |
| **K- 07 25 10 82** | G 1/2 | 1250 | 79,0 | 18,0 | 168,4 | 50,0 | 15 |
| **K- 07 25 10 85** | G 3/4 | 7000 | 133,0 | 36,0 | 206,0 | 134,0 | 20 |
| **K- 07 25 10 88** | G 1 | 7000 | 133,0 | 36,0 | 206,0 | 120,0 | 25 |

## Nadomestni deli

| | |
|---|---|
| **K-HALTERBAUSATZ STANDARD** | Holder |
| **K-FILTERELEMENT STANDARD** | Filter element |
| **K-SCHUTZKORB G** | Protective cage |
| **K-XV AGM MS NI** | Double nipples, parallel male thread, nickel-plated brass |
| **K-LOESBARE DOPPELNIPPEL MS** | Double nipples |

*Kljub skrbnemu preverjanju napak ne moremo izključiti in za informacije, ki so tu navedene, ne prevzemamo nobene odgovornosti.*