K-FI SPEZI METALLBEHAEL M STANDAD

Special filters with metal bowl and manual drain valve

Lastnosti

vstopni tlak	Max. 16 bar (polycarbonate bowl / bowl guard), Max. 25 bar (metal bowl)
temperatura medija	max. 50 °C
temperatura okolice	Max. 50 °C
izkoristek	99.999 %
velikost por v filtrirnem elementu	0.01 µm
ohišje	Die-cast zinc, painted silver
meritev pretoka	At P2 = 6 bar and pressure drop Δp = 1 bar



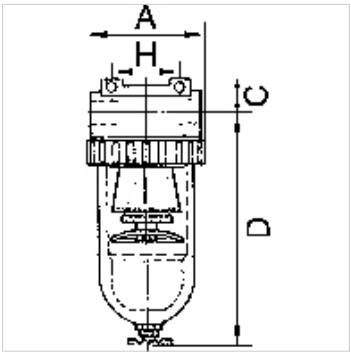

Navodilo

Drugi podatki na zahtevo.

Opis

For all applications with particularly strict compressed air purity requirements. The separating efficiency of these filters permits very fine oil vapour particles and micro-fine suspended particles to be filtered. A standard filter should always be connected upstream to trap coarse impurities and protect the micro-filter inserts.

Artikel

Opis	Navoj	pretok (L/min)	A (mm)	C (mm)	D (mm)	H (mm)	DN
K- 07 25 10 74	G 1/4	380	48,0	14,0	133,5	38,0	6
K- 07 25 10 77	G 3/8	380	48,0	14,0	133,5	38,0	6
K- 07 25 10 79	G 3/8	720	70,0	16,0	159,0	50,0	10
K- 07 25 10 81	G 1/2	1250	79,0	18,0	171,0	50,0	15
K- 07 25 10 84	G 3/4	7000	133,0	36,0	206,0	134,0	20
K- 07 25 10 87	G 1	7000	133,0	36,0	206,0	120,0	25

Nadomestni deli

K-HALTERBAUSATZ STANDARD	Holder
K-FILTERELEMENT STANDARD	Filter element
K-SCHUTZKORB G	Protective cage
K-XV AGM MS NI	Double nipples, parallel male thread, nickel-plated brass
K-LOESBARE DOPPELNIPPEL MS	Double nipples

Kljub skrbnemu preverjanju napak ne moremo izključiti in za informacije, ki so tu navedene, ne prevzemamo nobene odgovornosti.