K-FI REGL METALLBE MANO STANDARD-MI

Filter regulators with metal bowl, incl. pressure gauge and panel nut

Lastnosti

vstopni tlak	Max. 16 bar (polycarbonate bowl), Max. 25 bar (metal bowl)
temperatura medija	max. 60 °C
temperatura okolice	Max. 60 °C
pretok	350 l/min
velikost por v filtrirnem elementu	5 µm
tesnilni material	NBR
vzmetni pokrov	POM-brass
ohišje	Die-cast zinc, painted silver
Drain valve	Semi-automatic for variant with polycarbonate bowl, Manual for variant with metal bowl
meritev pretoka	At P1 = 8 bar, P2 = 6 bar and pressure drop Δp = 1 bar



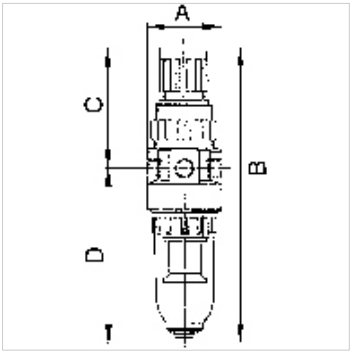

Navodilo

Drugi podatki na zahtevo.

Opis

Compact, reversible diaphragm pressure regulators, independent of inlet pressure, with self-relieving design, combined with a centrifugal separator.
The pressure setting can be locked by pushing the knob down.

Artikel

Opis	Navoj	regulacijsko območje	A (mm)	B	C (mm)	D (mm)	DN
K- 07 25 06 65	G 1/8	0.5 - 10 bar	40,0	163,5 mm	65,0	98,5	5
K- 07 25 06 66	G 1/4	0.5 - 10 bar	40,0	163,5 mm	65,0	98,5	5

Nadomestni deli

K-HALTERBAUSATZ	Holder
K-SCHALTTAFELMUTTER	Nut
K-ERSATZBEHAELTER MULTI MINI	Spare tank »multifix-mini« & »standard-mini«
K-PC-BEHAELTER FILTER MULTIFIX	Polycarbonate tank filter
K-FILTERELEMENT	Filter element
K-AUTOMAT ABLASSVENTIL	Automatic drain valve
K-LOESBARE DOPPELNIPPEL MS	Double nipples
K-XV AGM MS NI	Double nipples, parallel male thread, nickel-plated brass
K-VERSCHLEI-SATZ	Set of wearing parts

Kljub skrbnemu preverjanju napak ne moremo izključiti in za informacije, ki so tu navedene, ne prevzemamo nobene odgovornosti.