K-FI REGL PC-BEHAEL MANO VARIOBLOC

Filter regulators with polycarbonate bowl and pressure gauge

Lastnosti

vstopni tlak	Max. 16 bar (polycarbonate bowl), Max. 20 bar (metal bowl)
temperatura medija	max. 50 °C
temperatura okolice	Max. 50 °C (polycarbonate bowl), Max. 80 ° C (metal bowl)
velikost por v filtrirnem elementu	40 µm
tesnilni material	NBR
vzmetni pokrov	POM
ohišje	Die-cast zinc
membrana	NBR
Drain valve	Manual
meritev pretoka	At P1 = 10 bar, P2 = 6 bar and pressure drop Δp = 1 bar



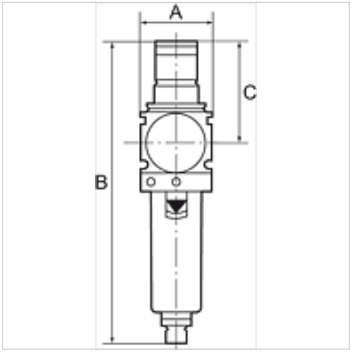

Navodilo

Drugi podatki na zahtevo.

Opis

Reversible diaphragm pressure regulators, independent of inlet pressure, with self-relieving design, combined with a centrifugal separator. The pressure setting can be locked by pushing the knob down. Approved series in modern industrial design, with the following key benefits: Simple handling, Convenient modular assembly thanks to innovative fasteners, Excellent flow values.

Navodila za naročanje

Filter regulators are also available with bowl guard or metal bowl. Filter regulators are also available in lockable version. Please ask for more information.

Dodatne informacije

Filter regulators are also available with bowl guard or metal bowl. Filter regulators are also available in lockable version. Please ask for more information.

Artikel

Opis	Navoj	regulacijsko območje	pretok (L/min)	A (mm)	B	C (mm)
K- 07 25 06 85	G 1/4	0.5 - 10 bar	2000	48,0	203,0 mm	68,0
K- 07 25 06 87	G 3/8	0.5 - 10 bar	3000	48,0	203,0 mm	68,0
K- 07 25 06 89	G 1/2	0.5 - 10 bar	5500	70,0	273,0 mm	98,0
K- 07 25 06 91	G 3/4	0.5 - 10 bar	6500	70,0	273,0 mm	98,0
K- 07 25 06 93	G 1	0.5 - 10 bar	6500	124,0	273,0 mm	98,0

Nadomestni deli

K-VERSCHLEI-SATZ VARIOBLOC	Set of wearing parts
K-ERSATZBEHAELTER VARIOBLOC POLY	Spare tank Polycarbonat
K-FILTERELEMENT VARIOBLOC	Filter element
K-ABLASSVENTIL AUTO	Fully-automatic drain valve with Adapter G 1/8

Kljub skrbnemu preverjanju napak ne moremo izključiti in za informacije, ki so tu navedene, ne prevzemamo nobene odgovornosti.