K-KDR SCHNVERSCHR

Mini pressure regulators, discharge port on thread, quick-lock screw fitting

Lastnosti

regulacijsko območje	0 - 8 bar
vstopni tlak	Max. 10 bar
območje temperatur:	0 °C to +70 °C
votli vijak, vrtljiva ročica, regulirni vijak	Nickel-plated brass
notranji deli	Brass with a bare metal surface
tesnilo z zavihkom tesnilnega obroča	NBR
tesnila (neizgubljiva)	Polyamide (glass fibre-reinforced)



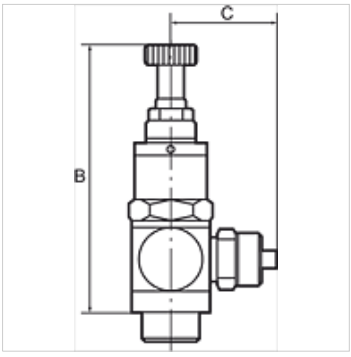

Navodilo

Drugi podatki na zahtevo.

Opis

Piston pressure regulator with self-relieving design, hollow bolt and pivoting ring piece. The regulator is screwed directly into the consumer (e.g. cylinder, handling equipment, etc.). The working pressure can thus be adapted to the specific application.

Artikel

Opis	C (mm)	za cev	Navoj	zev ključa	B (mm)
K- 07 25 08 33	16,0	G 1/8 IG	G 1/8	15 mm	56,0
K- 07 25 08 34	25,0	5 mm / 3 mm	G 1/8	15 mm	56,0
K- 07 25 08 35	25,0	6 mm / 4 mm	G 1/8	15 mm	56,0
K- 07 25 08 36	25,0	8 mm / 6 mm	G 1/8	15 mm	56,0
K- 07 25 08 31	26,5	6 mm / 4 mm	G 1/4	17 mm	63,0
K- 07 25 08 32	27,5	8 mm / 6 mm	G 1/4	17 mm	63,0
K- 07 25 08 30	28,5	10 mm / 8 mm	G 1/4	17 mm	63,0

Kljub skrbnemu preverjanju napak ne moremo izključiti in za informacije, ki so tu navedene, ne prevzemamo nobene odgovornosti.