K-STOPPVENTILE STECK

Stop valves, ports 2 and 3 with plug connection

Lastnosti

delovni tlak	Max. 10 bar
krmilni tlak	1 - 5 bar, depending on operating pressure
temperatura medija	max. 70 °C
Vgradna lega	Any. Ring pieces can still be rotated 360° after the valve has been tightened
tesnilni material	Perbunan



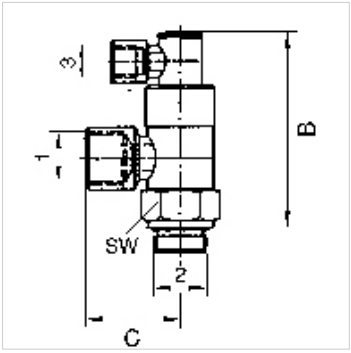

Navodilo

Drugi podatki na zahtevo.

Opis

For high-speed positioning and stop functions as well as emergency switching (e.g. emergency stop). If a control signal is present at port 3, air can flow to and from the cylinder. If no control signal is present, the air flow to and from the cylinder is shut off, causing the cylinder to stop in the required position. Stop valves are screwed directly onto the cylinder instead of the normal pipe connections.

Artikel

Opis	Port 1	Port 2	Priključek 3	Material:	B (mm)	C (mm)
K- 07 15 20 50	G 1/8	6 mm	4 mm	Nickel-plated brass	52,0	25,0
K- 07 15 20 49	G 1/4	6 mm	4 mm	Nickel-plated brass	58,0	28,0
K- 07 15 20 51	G 3/8	8 mm	4 mm	Nickel-plated brass	63,0	32,0
K- 07 15 20 48	G 1/2	12 mm	4 mm	Nickel-plated brass	72,0	41,0

Kljub skrbnemu preverjanju napak ne moremo izključiti in za informacije, ki so tu navedene, ne prevzemamo nobene odgovornosti.