K-S-BKR O ENTL ABSCHL

Safety ball valves, lockable, without relief port

HANSA-FLEX

Lastnosti

opis navoja	Rp thread acc. to EN 10226
temperatura	-40 ° C up to max. +170 ° C; Warning: The freezing fluid in the system may damage the valve difficult
ohišje	Nickel-plated brass
ročica	Steel - PVC coated
tesnilo krogle	PTFE
tesnilo vretena	PTFE



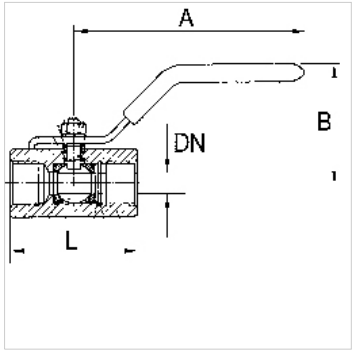

Navodilo

G thread acc. to DIN EN ISO 228-1, with ISO flange plate (acc. to ISO 5211)
Drugi podatki na zahtevo.

Opis

2/2-way safety ball valves made of nickel-plated brass. Specially designed for pneumatic applications. The ball valve can be locked manually. Full bore, heavy-duty type.

Dodatne informacije

The price does not include a padlock. Please order separately.

Artikel

Opis	DN	Navoj	PN (bar)	A (mm)	B (mm)	L (mm)
K- 07 30 21 29	8	Rp 1/4	65	82,0	39,5	51,0
K- 07 30 21 30	10	Rp 3/8	65	82,0	39,5	51,0
K- 07 30 21 31	15	Rp 1/2	65	100,0	43,0	61,0
K- 07 30 21 32	20	Rp 3/4	40	120,0	52,5	74,5
K- 07 30 21 33	25	Rp 1	40	120,0	57,0	90,5
K- 07 30 21 34	32	Rp 1 1/4	30	158,0	78,0	104,0
K- 07 30 21 35	40	Rp 1 1/2	30	158,0	85,0	117,0
K- 07 30 21 36	50	Rp 2	30	158,0	92,0	135,0

Pribor

K-VORHAENGESCHLOSS	Padlock

Kljub skrbnemu preverjanju napak ne moremo izključiti in za informacije, ki so tu navedene, ne prevzemamo nobene odgovornosti.