K-WTST SAFETY BKR SCHA AN FILR MULT

SAFETY service unit sets, comprising a ball valve with silencer, start-up valve and filter regulator with lock cylinder

Lastnosti

vstopni tlak	2 - 16 bar
izhodni tlak	0.5 - 10 bar
območje temperatur:	Max. 60 °C
Sredstva	stisnjen zrak
tesnilni material	NBR
posoda	Polycarbonate (with bayonet lock) and bowl guard
vzmetni pokrov	POM
filtrirni element	Cellpor (PE) 5 µm
ohišje	Die-cast zinc
membrana	NBR
Drain valve	Semi-automatic
meritev pretoka	At P1 = 8 bar, P2 = 6 bar and pressure drop Δp = 1 bar
drugi podatki	see data sheets of the individual components (on request)
odzračevalni priključek krogelna pipa	Silencer



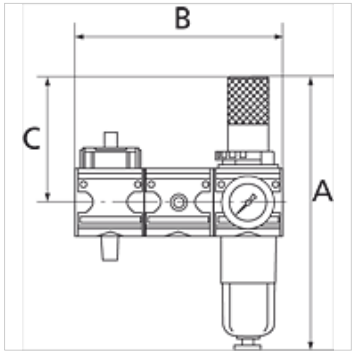

Opis

These compressed air service unit sets, comprising a ball valve with silencer, a start-up valve and one out of a pressure regulator, filter regulator or service unit, meet even the strictest requirements for operating reliability and accident prevention!

Navodila za naročanje

The price does not include a padlock. Please order separately. For accessories and spare parts, refer to individual components: ball valve, start-up valve, pressure regulator, filter regulator, 2-piece service unit.

Artikel

Opis	Navoj	pretok (L/min)	A (mm)	B	C (mm)	izpust kondenzata
K- 07 25 15 14	G 1/4	1000	219,1	137,8 mm	94,0	Semi-automatic
K- 07 25 15 15	G 1/2	4000	269,3	200,8 mm	122,0	Semi-automatic
K- 07 25 15 16	G 1	12000	410,8	282,8 mm	157,0	Semi-automatic

Kljub skrbnemu preverjanju napak ne moremo izključiti in za informacije, ki so tu navedene, ne prevzemamo nobene odgovornosti.