K-BKR ELK 24VDC

Stainless steel ball valves with electric actuator 24 VDC

HANSA-FLEX

Lastnosti

temperatura medija	-20 °C to +70 °C
Obratovalni tlak	max. 63 bar (depending on temperature and nominal size)
trajanje vklopa	ED 30 %
vlažnost zraka	30 % to 95 %
položaji stikala	Manually operated
razred zaščite	IP 67
čas nastavitve	13 sec. = 230 VAC, 50 Hz 15 sec. = 24 VDC
temperatura okolice	-20 °C do +60 °C
konstrukcijska dolžina	DIN 3203 - M3
montažna prirobnica	ISO 5211
ohišje	Aluminium, powder-coated
krogelna pipa	Stainless steel 1.4401/1.4408
tesnilo krogle	PTFE, glass fibre-reinforced
tesnilo preklopne gredi	PTFE, glass fibre-reinforced



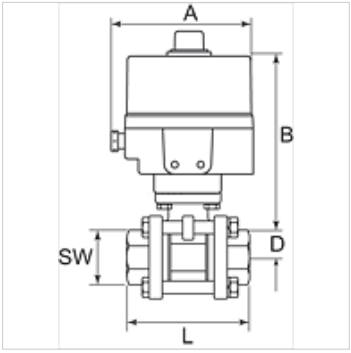

Navodilo

Drugi podatki na zahtevo.

Opis

Voltage range 230 VAC, 50 Hz or 24 VDC.
Reversible electric rotary actuator.

Artikel

Opis	DN	Navoj	A (mm)	B (mm)	D (mm)	L (mm)	SW (mm)
K- 07 30 20 70	15	Rp 1/2	152,0	191,0	24,0	75,0	29
K- 07 30 20 71	20	Rp 3/4	152,0	195,0	26,0	80,0	35
K- 07 30 20 72	25	Rp 1	152,0	203,0	29,0	90,0	41
K- 07 30 20 73	32	Rp 1 1/4	152,0	209,0	36,0	110,0	50
K- 07 30 20 74	40	Rp 1 1/2	152,0	219,0	40,0	120,0	58
K- 07 30 20 75	50	Rp 2	152,0	275,0	48,0	140,0	72

Kljub skrbnemu preverjanju napak ne moremo izključiti in za informacije, ki so tu navedene, ne prevzemamo nobene odgovornosti.