# K-SCHALLDAE FEDEREINSTELLUNG
Adjustable spring silencers

## Lastnosti

| | |
|---|---|
| **Obratovalni tlak** | maks. 12 bar |
| **delovna temperatura** | -10 °C to +80 °C |



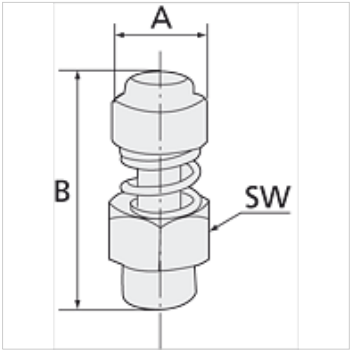


## Navodilo

Drugi podatki na zahtevo.

## Artikel

| Opis | Navoj | A (mm) | B maks. (mm) | B min. (mm) | zev ključa |
|---|---|---|---|---|---|
| **K- 07 40 34 64** | G 1/8 | 12,0 | 28,0 | 26,0 | 13 mm |
| **K- 07 40 34 65** | G 1/4 | 14,0 | 32,0 | 30,0 | 15 mm |
| **K- 07 40 34 66** | G 3/8 | 17,0 | 38,0 | 36,0 | 22 mm |
| **K- 07 40 34 67** | G 1/2 | 17,0 | 39,0 | 37,0 | 22 mm |
| **K- 07 40 34 68** | G 3/4 | 32,0 | 50,0 | 46,0 | 30 mm |
| **K- 07 40 34 69** | G 1 | 32,0 | 50,0 | 47,0 | 36 mm |

*Kljub skrbnemu preverjanju napak ne moremo izključiti in za informacije, ki so tu navedene, ne prevzemamo nobene odgovornosti.*