K-BKR BLAU STAHLHEBEL IG AG

Ball valves with blue steel lever, lighweight type, female/male thread

HANSA-FLEX

Lastnosti

Območje uporabe	Compressed air, water, non-toxic and non-corrosive gases, heating systems, agriculture
Obratovalni tlak	Max. 40 bar
delovna temperatura	-15 °C to +90 °C
opis navoja	G thread acc. DIN EN ISO 228-1
ohišje	Nickel-plated brass
vzvod	Steel, with plastic coating
krogla	Chrome-plated brass
tesnilo krogle	PTFE
tesnilo vretena	HNBR / EPDM / PTFE. 2 O-Rings (HNBR / EPDM) 1 gasket (PTFE) additional PTFE-gasket



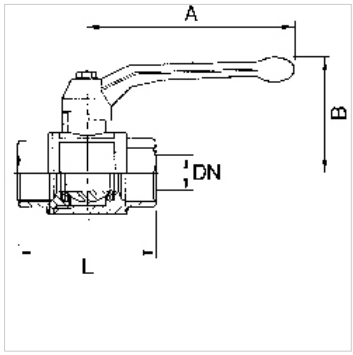

Navodilo

Drugi podatki na zahtevo.

Artikel

Opis	DN	Navoj	A (mm)	B (mm)	L (mm)
K- 07 30 00 48	8	G 1/4	85,0	42,0	44,0
K- 07 30 00 52	10	G 3/8	85,0	42,0	51,0
K- 07 30 00 56	15	G 1/2	85,0	46,0	60,0
K- 07 30 00 60	20	G 3/4	105,0	53,0	70,0
K- 07 30 00 64	25	G 1	105,0	57,0	79,0
K- 07 30 00 68	32	G 1 1/4	130,0	70,0	91,0
K- 07 30 00 72	40	G 1 1/2	130,0	76,0	104,0
K- 07 30 00 76	50	G 2	165,0	92,0	122,0

Kljub skrbnemu preverjanju napak ne moremo izključiti in za informacije, ki so tu navedene, ne prevzemamo nobene odgovornosti.