K-SCHL-AUFROLLER LU WA S

Hose reels for compressed air and water, heavy-duty type

Lastnosti

Material cevi	Polyurethane
Obratovalni tlak	maks. 10 bar
delovna temperatura	-10 °C to +40 °C
Pritrditev	Wall, floor or ceiling
vhod	Hose stem 8 mm



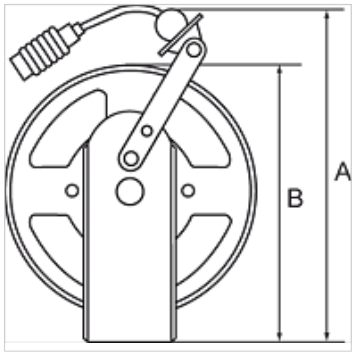

Navodilo

Drugi podatki na zahtevo.

Opis

Heavy-duty steel design for industrial applications. Blue, powder-coated housing. An automatic latching mechanism allows the hose to be engaged at any length. Enclosed spring. Precise locking device for continuous feeding or latching mechanism. Reel guide prevents excessive wear on the hose.

Artikel

Opis	mera cevi	A (mm)	B (mm)	dolžina cevi (m)
K- 07 10 06 24	10 mm x 6,5 mm	420,0	353,0	10
K- 07 10 06 25	10 mm x 6,5 mm	420,0	353,0	20
K- 07 10 06 26	12 mm x 8 mm	420,0	353,0	15
K- 07 10 06 27	16 mm x 11 mm	420,0	353,0	15

Kljub skrbnemu preverjanju napak ne moremo izključiti in za informacije, ki so tu navedene, ne prevzemamo nobene odgovornosti.