K-ZFL ABSP-KLAPPEN DOPPEL

Butterfly valves, with double-acting actuator, min. pilot pressure 5 bar

HANSA FLEX

Lastnosti

Način izdelave	Pneumatic actuators, in double- or single acting version
Obratovalni tlak	Max. 16 bar
delovna temperatura	-15 °C to +120 °C
Sredstva	Water / steam, salt water, salt water, ester, ketone, alkali, caustic soda, sodium hydroxide. Not recommended for hydrocarbons
krmilni tlak	5.5 bar
ventilski adapter	Supplied as standard, operated by a 3/2- or 5/2-way valve
kot zasuka	90 °
pogon	aluminium eloxed
tesnilo pogona	NBR
ohišje	Grey cast iron GG25 epoxy resin coated, RAL 5015
tesnilo	EPDM
gred	SS416
gredni tesnilni obroč	EPDM
krmiljenje	



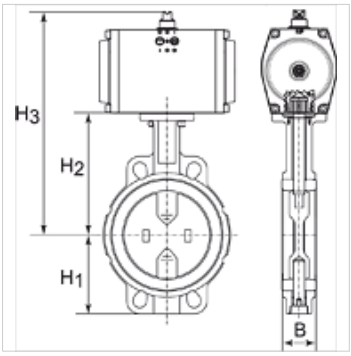

Navodilo

Drugi podatki na zahtevo.

Artikel

Opis	ploščica	DN	B (mm)	H1 (mm)	H2 (mm)	H3 (mm)	L (mm)
K- 07 30 03 28	Stainless Steel CF8M/1.4404	40	38,0	68,0	108,0	212,0	94,0
K- 07 30 03 29	Stainless Steel CF8M/1.4404	50	47,0	71,0	143,0	247,0	100,0
K- 07 30 03 30	Stainless Steel CF8M/1.4404	65	49,0	78,0	155,0	259,0	115,0
K- 07 30 03 31	Stainless Steel CF8M/1.4404	80	47,0	89,0	162,0	280,0	127,0
K- 07 30 03 32	Stainless Steel CF8M/1.4404	100	56,0	102,0	178,0	308,0	163,0
K- 07 30 03 33	Stainless Steel CF8M/1.4404	125	59,0	123,0	191,0	321,0	190,0
K- 07 30 03 35	Stainless Steel CF8M/1.4404	150	59,0	138,0	205,0	352,0	216,0

Kljub skrbnemu preverjanju napak ne moremo izključiti in za informacije, ki so tu navedene, ne prevzemamo nobene odgovornosti.