K-FI METALLBEHAEL SICHT H G

Filters with metal bowl, sight glass and »HW« mounting bracket, semi-automatic drain valve

Lastnosti

vstopni tlak	Max. 10 bar
temperatura medija	max. 70 °C
temperatura okolice	Max. 70 °C
delovni tlak	1.5 - 9 bar
velikost por v filtrirnem elementu	5 µm
tesnilni material	NBR
ohišje	Die-cast aluminium
Drain valve	Semi- or fully-automatic
meritev pretoka	At P1 = 8 bar, P2 = 6 bar and pressure drop Δp = 1 bar
drugi podatki	User manual on request



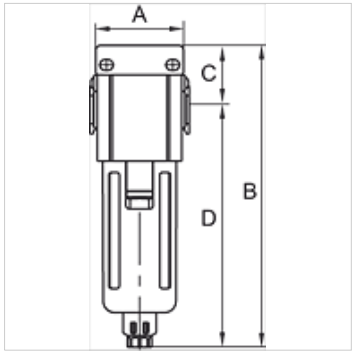

Artikel

Opis	Navoj	pretok (L/min)	A (mm)	B	C (mm)	D (mm)	Velikost
K- 07 25 06 45	G 3/4	7800	85,0	256,0 mm	37,0	219,0	3
K- 07 25 06 47	G 1	7800	85,0	256,0 mm	37,0	219,0	3

Pribor

K-ERSATZBEHAELTER G UND G-MINI POLY	Spare tanks »G« Series and »G-mini« Series Polycarbonat
K-SCHUTZKORB G	Protective cage
K-FILTERELEMENT	Filter element
K-HALTERBAUSATZ	Holder
K-VERBINDUNGELEMENTE	Connecting sets
K-WANDHALTER	Wall bracket

Kljub skrbnemu preverjanju napak ne moremo izključiti in za informacije, ki so tu navedene, ne prevzemamo nobene odgovornosti.