K-WTEH 2-TLG PC SCHU VARIOBLOC

Service units, 2-piece with polycarbonate bowl and bowl guard

Lastnosti

vstopni tlak	Max. 16 bar (polycarbonate bowl), Max. 20 bar (metal bowl)
temperatura medija	max. 50 °C
temperatura okolice	Max. 50 °C (polycarbonate bowl), Max. 80 ° C (metal bowl)
velikost por v filtrirnem elementu	40 µm
tesnilni material	NBR
vzmetni pokrov	POM
ohišje	Die-cast zinc
membrana	NBR
kapalni nastavek	PA
Drain valve	Manual
meritev pretoka	At P1 = 10 bar, P2 = 6 bar and pressure drop Δp = 1 bar



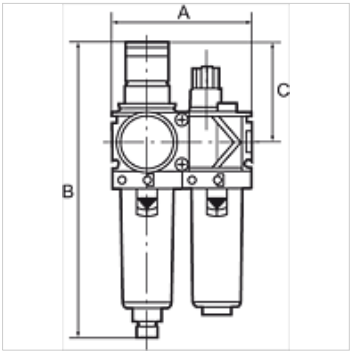

Navodilo

Drugi podatki na zahtevo.

Opis

Two or three-piece service units consisting of a reversible diaphragm pressure regulator, independent of inlet pressure, with self-relieving design, combined with a centrifugal separator and a proportional lubricator. Approved series in modern industrial design, with the following key benefits: Simple handling, Convenient modular assembly thanks to innovative fasteners, Excellent flow values.

Navodila za naročanje

Service units are also available with bowl guard or metal bowl. Service units are also available in other control ranges (0.5 - 6 bar and 0.5 - 16 bar) and in lockable version. Please ask for more information.

Dodatne informacije

Service units are also available with bowl guard or metal bowl. Service units are also available in other control ranges.

Artikel

Opis	Navoj	regulacijsko območje	pretok (L/min)	A (mm)	B	C (mm)
K- 07 25 22 81	G 1/4	0.5 - 10 bar	1500	96,0	203,0 mm	68,0
K- 07 25 22 80	G 3/8	0.5 - 10 bar	1800	96,0	203,0 mm	68,0
K- 07 25 22 79	G 1/2	0.5 - 10 bar	3400	140,0	273,0 mm	98,0
K- 07 25 22 78	G 3/4	0.5 - 10 bar	5000	140,0	273,0 mm	98,0
K- 07 25 22 77	G 1	0.5 - 10 bar	5000	194,0	273,0 mm	98,0

Kljub skrbnemu preverjanju napak ne moremo izključiti in za informacije, ki so tu navedene, ne prevzemamo nobene odgovornosti.