K-STECKVERSCHR 45° DRE AG-K

45° union elbows, swivel type, conical male thread, coated

Lastnosti

delovni tlak	Max. 15 bar, coarse vacuum
Območje uporabe	Air, vacuum
priporočene cevi	PU or PA (nylon)
Sredstva	Compressed air and all gases or liquids that are compatible with the materials
območje temperatur:	-20 °C to +80 °C
tesnilna ploskev	Conical version: thread coating
Material:	Plastic, Nickel plated brass
potisni obroč	Plastic



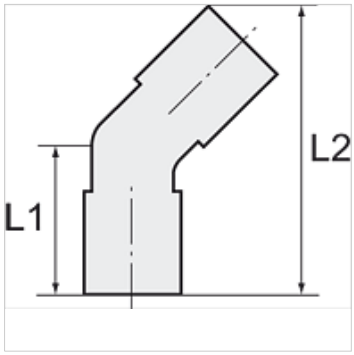

Navodilo

Drugi podatki na zahtevo.

Opis

Push-in fittings series manufactured in plastic and nickel-plated brass. All parts are suitable for use with hoses, tubes or pipes made of plastic and copper.

Artikel

Opis	Navoj	za zunanji Ø mm cevi	L1 (mm)	L2 (mm)	zev ključa
K- 07 40 04 81	R 1/8	4 mm	22,7	38,5	10 mm
K- 07 40 04 82	R 1/8	6 mm	24,4	42,0	12 mm
K- 07 40 04 83	R 1/8	8 mm	27,6	48,0	14 mm
K- 07 40 04 80	R 1/8	10 mm	30,2	53,6	17 mm
K- 07 40 04 77	R 1/4	4 mm	25,7	41,5	14 mm
K- 07 40 04 78	R 1/4	6 mm	26,9	44,5	14 mm
K- 07 40 04 79	R 1/4	8 mm	29,6	50,0	14 mm
K- 07 40 04 75	R 1/4	10 mm	32,2	55,6	17 mm
K- 07 40 04 76	R 1/4	12 mm	35,2	61,9	21 mm
K- 07 40 04 86	R 3/8	6 mm	28,4	46,0	17 mm
K- 07 40 04 87	R 3/8	8 mm	31,1	51,5	17 mm
K- 07 40 04 84	R 3/8	10 mm	33,2	56,6	17 mm
K- 07 40 04 85	R 3/8	12 mm	36,2	62,9	21 mm
K- 07 40 04 73	R 1/2	6 mm	31,9	49,5	21 mm
K- 07 40 04 74	R 1/2	8 mm	34,6	55,0	21 mm
K- 07 40 04 71	R 1/2	10 mm	36,7	60,1	21 mm
K- 07 40 04 72	R 1/2	12 mm	39,2	65,9	21 mm

Kljub skrbnemu preverjanju napak ne moremo izključiti in za informacije, ki so tu navedene, ne prevzemamo nobene odgovornosti.