K-FI AK KOH PC-BEHAEL VARIOBLOC

Activated carbon filters with polycarbonate bowl

Lastnosti

vstopni tlak	Max. 16 bar (polycarbonate bowl), Max. 20 bar (metal bowl)
temperatura medija	max. 50 °C
temperatura okolice	Max. 50 °C (polycarbonate bowl), Max. 80 °C (metal bowl)
kakovost zraka po ISO 85731	Class 1 dirt, class 1 oil
preostanek olja	0,003 mg/m3
meritev pretoka	At P1 = 7 bar and pressure drop Δp = 0,1 bar



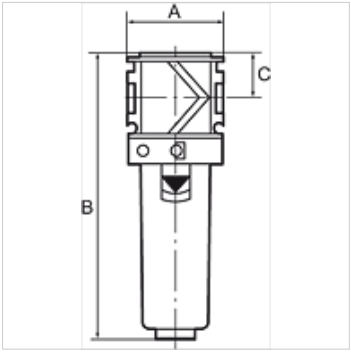

Navodilo

Activated carbon filters are also supplied with protective cage or metal container.
Drugi podatki na zahtevo.

Opis

The activated carbon filter absorbs oil vapour from the compressed air. The entering compressed air needs to be dry and free of contaminants (an upstream microfilter is strongly recommended).

Artikel

Opis	Navoj	pretok (L/min)	A (mm)	B	C (mm)
K- 07 25 19 59	G 1/4	800	48,0	142,0 mm	22,0
K- 07 25 19 60	G 3/8	1000	48,0	142,0 mm	22,0
K- 07 25 19 61	G 1/2	1200	70,0	193,0 mm	26,0
K- 07 25 19 62	G 3/4	1300	70,0	193,0 mm	26,0
K- 07 25 19 63	G 1	1300	124,0	193,0 mm	26,0

Kljub skrbnemu preverjanju napak ne moremo izključiti in za informacije, ki so tu navedene, ne prevzemamo nobene odgovornosti.