K-ROHRFLANSCH ALU INFI

Pipe flange according to UNI EN 1092 - 4 PN 16 made of aluminium

HANSA-FLEX

Lastnosti

Material: Aluminium surface treated



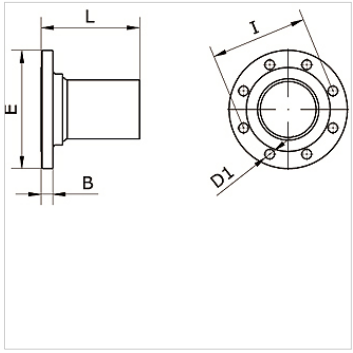

Artikel

Opis	zunanji Ø cevi	B (mm)	D1 (mm)	E (mm)	I (mm)	L (mm)
K- 07 40 55 11	80 mm	20,0	18,0	200,0	160,0	155,0
K- 07 40 54 58	110 mm	18,0	18,0	220,0	180,0	183,0

Kljub skrbnemu preverjanju napak ne moremo izključiti in za informacije, ki so tu navedene, ne prevzemamo nobene odgovornosti.