# K-BEFESTIGUNGSELEMENTE PF3W

mounting element PF3W

## Lastnosti

| | |
|---|---|
| **serija** | PF3W |
| **drugi podatki** | Accessories for Digital Flow Switch PF3W |



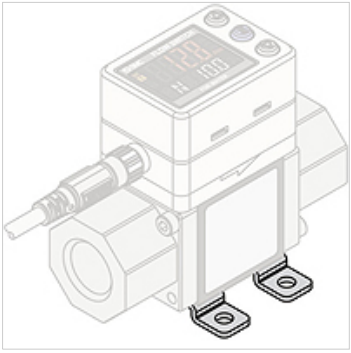

## Opis

Mount, for PF3W704/720, including 4 self-tapping screws (3 x 8)

## Artikel

| Opis | Izvedba | definicija |
|---|---|---|
| **K- 07 60 00 26** | including 4-tapping screws (3 x 8) | Mounting element for PF3W704/720 |
| **K- 07 60 00 27** | including 4-tapping screws (3 x 8) | Mounting element for PF3W740 |
| **K- 07 60 00 28** | including 4-tapping screws (4 x 10) | Mounting element for PF3W711 |

*Kljub skrbnemu preverjanju napak ne moremo izključiti in za informacije, ki so tu navedene, ne prevzemamo nobene odgovornosti.*