XSTOR VA

Zglobni navojni spoj, bez prigušivanja, T oblik

Osobine

Priključak 1	BSP spoljni cilindrični navoj
Oblik zaptivke 1	Oblik E
Priključak 2 + 3	metrički spoljni cilindrični navoj
Oblik zaptivke 2 + 3	24° unutrašnji konus
Konstrukcija	Zglobni navojni spoj, bez prigušivanja (visoki pritisak)
Konstrukcija	T oblik
Obim isporuke	Nastavak (bez preklopne navrtke i reznog prstena)
Materijal	plemeniti čelik



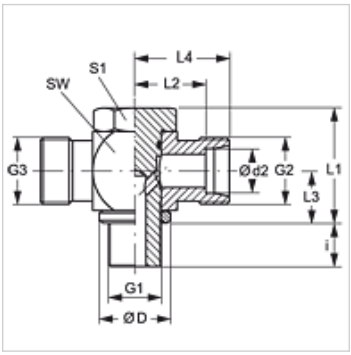

Napomena

Molimo Vas da napomene za montažu, ugradnju, opterećenje pod pritiskom i dozvoljene radne temperature nađete u tehničkim informacijama o navojnim spojevima za cevi.

Napomene u vezi porudžbine

NBR заптивке

ФПМ (витон) на захтев

Artikal

Naziv	Serija	Radni pritisak bar	Ø d2 (mm)	G1	G2 + G3	Ø D (mm)	i (mm)	L1 (mm)	L2 (mm)	L3 (mm)	L4 (mm)	SW (mm)	S1
XSTOR 04 LL VA	LL	PN 63	4	G 1/8" -28	M 8 x 1	14,0	8	24	11,0	8,0	15,0	18	17
XSTOR 06 LL VA	LL	PN 63	6	G 1/8" -28	M 10 x 1	14,0	8	24	11,5	10,0	17,0	18	17
XSTOR 08 LL VA	LL	PN 63	8	G 1/8" -28	M 12 x 1	14,0	8	24	11,5	10,0	17,0	18	17
XSTOR NW 04 HL VA	L	PN 250	6	G 1/8" -28	M 12 x 1,5	14,0	8	24	12,0	10,5	19,0	17	17
XSTOR NW 06 HL VA	L	PN 250	8	G 1/4" -19	M 14 x 1,5	18,0	12	30	14,5	14,0	22,0	22	19
XSTOR NW 08 HL VA	L	PN 250	10	G 1/4" -19	M 16 x 1,5	18,0	12	30	15,5	14,0	22,0	22	19
XSTOR NW 10 HL 1/4 VA	L	PN 250	12	G 1/4" -19	M 18 x 1,5	18,0	12	30	15,5	14,0	22,5	22	22
XSTOR NW 10 HL VA	L	PN 250	12	G 3/8" -19	M 18 x 1,5	22,0	12	36	18,0	16,5	28,0	27	24
XSTOR NW 13 HL VA	L	PN 250	15	G 1/2" -14	M 22 x 1,5	26,0	14	45	21,5	21,5	29,0	32	30
XSTOR NW 16 HL VA	L	PN 315	18	G 1/2" -14	M 26 x 1,5	26,0	14	45	21,0	21,5	28,0	32	30
XSTOR NW 20 HL VA	L	PN 160	22	G 3/4" -14	M 30 x 2	32,0	16	53	27,5	24,0	35,0	41	36
XSTOR NW 25 HL VA	L	PN 160	28	G 1" -11	M 36 x 2	39,0	18	66	32,0	30,5	40,0	50	46
XSTOR NW 32 HL VA	L	PN 160	35	G 1.1/4" -11	M 45 x 2	49,0	20	76	36,0	35,5	47,0	60	55
XSTOR NW 40 HL VA	L	PN 160	42	G 1.1/2" -11	M 52 x 2	55,0	22	87	40,5	40,5	51,0	70	60
XSTOR NW 03 HS VA	S	PN 315	6	G 1/4" -19	M 14 x 1,5	18,0	12	30	16,5	14,0	22,0	22	19
XSTOR NW 04 HS VA	S	PN 315	8	G 1/4" -19	M 16 x 1,5	18,0	12	30	16,5	14,0	22,0	22	19
XSTOR NW 06 HS 1/4 VA	S	PN 315	10	G 1/4" -19	M 18 x 1,5	18,0	12	30	16,5	14,0	24,0	22	22
XSTOR NW 06 HS VA	S	PN 315	10	G 3/8" -19	M 18 x 1,5	22,0	12	36	18,5	16,5	26,0	27	24
XSTOR NW 08 HS VA	S	PN 315	12	G 3/8" -19	M 20 x 1,5	22,0	12	36	18,5	16,5	27,0	27	24
XSTOR NW 10 HS VA	S	PN 315	14	G 1/2" -14	M 22 x 1,5	32,0	15	45	22,5	21,5	30,0	32	27
XSTOR NW 13 HS VA	S	PN 315	16	G 1/2" -14	M 24 x 1,5	26,0	14	45	22,0	21,5	30,0	32	30
XSTOR NW 16 HS VA	S	PN 160	20	G 3/4" -14	M 30 x 2	32,0	16	53	26,5	24,0	37,0	41	36
XSTOR NW 20 HS VA	S	PN 160	25	G 1" -11	M 36 x 2	39,0	18	66	31,5	30,5	44,0	50	46
XSTOR NW 25 HS VA	S	PN 160	30	G 1.1/4" -11	M 42 x 2	49,0	20	76	37,0	35,5	51,0	60	55
XSTOR NW 32 HS VA	S	PN 160	38	G 1.1/2" -11	M 52 x 2	55,0	22	87	41,5	40,5	57,0	70	60

Serija: LL = veoma lako L = lako S = teško – PN = nominalni pritisak PB = maks. radni pritisak – Ø d2 = spoljni prečnik cevi

Varijante proizvoda

STOR VA	Zglobni navojni spoj, bez prigušivanja, T oblik, Nastavak sa preklopnom navrtkom i reznim prstenom

Uprkos pažljivom proveravanju, ne možemo isključiti greške i ne preuzimamo nikakvu garanciju za navedene podatke.