VN MG
Uvrtni navojni spoj

HANSA-FLEX

Osobine

Priključak 1	NPT spoljni navoj
Oblik zaptivke 1	zaptivanje preko navoja
Priključak 2	metrički spoljni cilindrični navoj
Oblik zaptivke 2	24° unutrašnji konus
Konstrukcija	Uvrtni navojni spoj
Konstrukcija	pravo
Norma	DIN 2353 ISO 8434-1
Obim isporuke	Nastavak sa preklopnom navrtkom i reznim prstenom
Materijal	Mesing



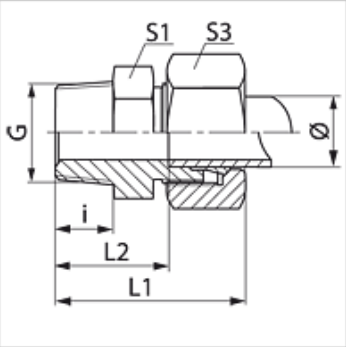

Napomena

Molimo Vas da napomene za montažu, ugradnju, opterećenje pod pritiskom i dozvoljene radne temperature nađete u tehničkim informacijama o navojnim spojevima za cevi.

Artikal

Naziv	Serija	Radni pritisak bar	Cev spolja Ø (mm)	G	i (mm)	L1 (mm)	L2 (mm)	S1	S3
VN 06 LL MG	LL	PN 63	6	1/8" -27 NPT	10,0	28,0	16,5	11	12
VN 08 LL MG	LL	PN 63	8	1/8" -27 NPT	10,0	30,0	18,5	12	14
VN NW 04 HL MG	L	PN 200	6	1/8" -27 NPT	10,0	32,0	17,0	12	14
VN NW 04 HL 1/4 MG	L	PN 200	6	1/4" -18 NPT	15,0	38,0	23,0	17	14
VN NW 04 HL 1/2 MG	L	PN 200	6	1/2" -14 NPT	20,0	44,0	29,0	24	14
VN NW 06 HL MG	L	PN 200	8	1/4" -18 NPT	15,0	38,0	23,0	17	17
VN NW 08 HL MG	L	PN 200	10	1/4" -18 NPT	15,0	39,0	24,0	17	19
VN NW 10 HL 1/4 MG	L	PN 200	12	1/4" -18 NPT	15,0	40,0	25,0	19	22
VN NW 10 HL MG	L	PN 200	12	3/8" -18 NPT	15,5	40,0	25,0	19	22
VN NW 10 HL 1/2 MG	L	PN 200	12	1/2" -14 NPT	20,0	45,0	30,0	24	22
VN NW 13 HL MG	L	PN 200	15	1/2" -14 NPT	20,0	46,0	31,0	24	27
VN NW 16 HL MG	L	PN 200	18	1/2" -14 NPT	20,0	48,0	31,5	27	32
VN NW 20 HL MG	L	PN 100	22	3/4" -14 NPT	20,0	50,0	33,5	32	36
VN NW 25 HL MG	L	PN 100	28	1" -11,5 NPT	25,0	56,0	39,5	41	41
VN NW 03 HS MG	S	PN 400	6	1/4" -18 NPT	15,0	43,0	28,0	17	17
VN NW 04 HS MG	S	PN 400	8	1/4" -18 NPT	15,0	43,0	28,0	17	19
VN NW 04 HS 1/2 MG	S	PN 400	8	1/2" -14 NPT	19,5	50,0	35,0	22	19
VN NW 06 HS MG	S	PN 400	10	3/8" -18 NPT	15,5	44,0	27,5	19	22
VN NW 06 HS 1/2 MG	S	PN 400	10	1/2" -14 NPT	20,0	51,0	34,5	24	22
VN NW 08 HS MG	S	PN 400	12	3/8" -18 NPT	15,5	46,0	29,5	22	24
VN NW 08 HS 1/2 MG	S	PN 400	12	1/2" -14 NPT	20,0	51,0	34,5	24	24
VN NW 10 HS MG	S	PN 400	14	1/2" -14 NPT	20,0	54,0	36,0	24	27
VN NW 13 HS MG	S	PN 250	16	1/2" -14 NPT	20,0	54,0	35,5	27	30
VN NW 16 HS MG	S	PN 250	20	3/4" -14 NPT	20,0	59,0	37,5	32	36

PN = nominalni pritisak PB = maks. radni pritisak – Serija: LL = veoma lako L = lako S = teško – Ø = spoljni prečnik cevi

Varijante proizvoda

VN	Uvrtni navojni spoj, čelik
VN VA	Uvrtni navojni spoj, plemeniti čelik

Uprkos pažljivom proveravanju, ne možemo isključiti greške i ne preuzimamo nikakvu garanciju za navedene podatke.