VN VA
Uvrtni navojni spoj

HANSA-FLEX

Osobine

Priključak 1	NPT spoljni navoj
Oblik zaptivke 1	zaptivanje preko navoja
Priključak 2	metrički spoljni cilindrični navoj
Oblik zaptivke 2	24° unutrašnji konus
Konstrukcija	Uvrtni navojni spoj
Konstrukcija	pravo
Norma	DIN 2353 ISO 8434-1
Obim isporuke	Nastavak sa preklopnom navrtkom i reznim prstenom
Materijal	plemeniti čelik



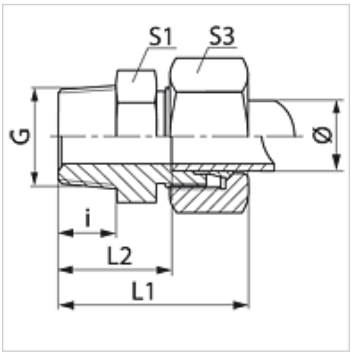

Napomena

Molimo Vas da napomene za montažu, ugradnju, opterećenje pod pritiskom i dozvoljene radne temperature nađete u tehničkim informacijama o navojnim spojevima za cevi.

Artikal

Naziv	Serija	Radni pritisak bar	Cev spolja Ø (mm)	G	i (mm)	L1 (mm)	L2 (mm)	S1	S3
VN 04 LL VA	LL	PN 100	4	1/8" -27 NPT	10,0	28,0	18,0	11	10
VN 06 LL VA	LL	PN 100	6	1/8" -27 NPT	10,0	28,0	16,5	11	12
VN 08 LL VA	LL	PN 100	8	1/8" -27 NPT	10,0	30,0	18,5	12	14
VN NW 04 HL VA	L	PN 315	6	1/8" -27 NPT	10,0	32,0	17,0	12	14
VN NW 04 HL 1/4 VA	L	PN 315	6	1/4" -18 NPT	15,0	38,0	23,0	17	14
VN NW 04 HL 3/8 VA	L	PN 315	6	3/8" -18 NPT	15,0	39,0	24,0	19	14
VN NW 04 HL 1/2 VA	L	PN 315	6	1/2" -14 NPT	20,0	44,0	29,0	24	14
VN NW 06 HL 1/8 VA	L	PN 315	8	1/8" -27 NPT	10,0	38,0	23,0	12	17
VN NW 06 HL VA	L	PN 315	8	1/4" -18 NPT	15,0	38,0	23,0	17	17
VN NW 06 HL 3/8 VA	L	PN 315	8	3/8" -18 NPT	15,5	39,0	24,0	19	17
VN NW 06 HL 1/2 VA	L	PN 315	8	1/2" -14 NPT	20,0	44,0	29,0	24	17
VN NW 08 HL 1/8 VA	L	PN 315	10	1/8" -27 NPT	15,5	39,5	25,0	19	19
VN NW 08 HL VA	L	PN 315	10	1/4" -18 NPT	15,0	39,0	24,0	17	19
VN NW 08 HL 3/8 VA	L	PN 315	10	3/8" -18 NPT	15,2	40,0	25,0	19	19
VN NW 08 HL 1/2 VA	L	PN 315	10	1/2" -14 NPT	20,0	45,0	30,0	24	19
VN NW 08 HL 3/4 VA	L	PN 315	10	3/4" -14 NPT	20,0	46,0	31,0	27	19
VN NW 10 HL 1/8 VA	L	PN 315	12	1/8" -27 NPT	15,0	40,0	25,0	19	22
VN NW 10 HL 1/4 VA	L	PN 315	12	1/4" -18 NPT	15,0	40,0	25,0	19	22
VN NW 10 HL VA	L	PN 315	12	3/8" -18 NPT	15,5	40,0	25,0	19	22
VN NW 10 HL 1/2 VA	L	PN 315	12	1/2" -14 NPT	20,0	45,0	30,0	24	22
VN NW 10 HL 3/4 VA	L	PN 315	12	3/4" -14 NPT	20,0	45,0	32,0	32	22
VN NW 13 HL 1/4 VA	L	PN 315	15	1/4" -18 NPT	15,0	40,0	25,0	19	22
VN NW 13 HL 3/8 VA	L	PN 315	15	3/8" -18 NPT	15,5	41,5	26,5	24	27
VN NW 13 HL VA	L	PN 315	15	1/2" -14 NPT	20,0	46,0	31,0	24	27
VN NW 13 HL 3/4 VA	L	PN 315	15	3/4" -14 NPT	20,0	46,0	32,0	32	27
VN NW 13 HL 1 VA	L	PN 315	15	1" -11,5 NPT	24,5	52,5	37,5	36	27
VN NW 16 HL 3/8 VA	L	PN 315	18	3/8" -18 NPT	15,3	43,0	26,5	27	32
VN NW 16 HL VA	L	PN 315	18	1/2" -14 NPT	20,0	48,0	31,5	27	32
VN NW 16 HL 3/4 VA	L	PN 315	18	3/4" -14 NPT	20,0	48,5	32,0	32	32
VN NW 16 HL 1 VA	L	PN 315	18	1" -11,5 NPT	25,0	54,0	37,5	36	32
VN NW 20 HL 3/8 VA	L	PN 160	22	3/8" -18 NPT	15,3	45,0	28,5	32	36
VN NW 20 HL 1/2 VA	L	PN 160	22	1/2" -14 NPT	20,0	50,0	33,5	32	36
VN NW 20 HL VA	L	PN 160	22	3/4" -14 NPT	20,0	50,0	33,5	32	36
VN NW 20 HL 1 VA	L	PN 160	22	1" -11,5 NPT	25,0	56,0	39,5	36	36
VN NW 20 HL 1 1/4 VA	L	PN 160	22	1.1/4" -11,5 NPT	25,5	68,0	46,5	46	36
VN NW 25 HL 1/2 VA	L	PN 160	28	1/2" -14 NPT	20,0	56,0	35,0	41	41
VN NW 25 HL 3/4 VA	L	PN 160	28	3/4" -14 NPT	20,0	51,0	34,5	41	41
VN NW 25 HL VA	L	PN 160	28	1" -11,5 NPT	25,0	56,0	39,5	41	41
VN NW 25 HL 1 1/4 VA	L	PN 160	28	1.1/4" -11,5 NPT	25,5	48,0	41,5	46	41
VN NW 32 HL 3/4 VA	L	PN 160	35	3/4" -14 NPT	20,0	56,5	35,0	46	50
VN NW 32 HL 1 VA	L	PN 160	35	1" -11,5 NPT	25,0	62,0	40,5	41	50
VN NW 32 HL VA	L	PN 160	35	1.1/4" -11,5 NPT	25,5	62,0	40,5	46	50
VN NW 32 HL 1 1/2 VA	L	PN 160	35	1.1/2" -11,5 NPT	26,0	69,0	42,5	55	50

Uprkos pažljivom proveravanju, ne možemo isključiti greške i ne preuzimamo nikakvu garanciju za navedene podatke.

VN VA
Uvrtni navojni spoj

HANSA-FLEX

Artikal

Naziv	Serija	Radni pritisak bar	Cev spolja Ø (mm)	G	i (mm)	L1 (mm)	L2 (mm)	S1	S3
VN NW 40 HL 1 VA	L	PN 160	42	1" -11,5 NPT	25,0	64,0	41,0	55	60
VN NW 40 HL 1 1/4 VA	L	PN 160	42	1.1/4" -11,5 NPT	25,5	65,0	42,0	55	60
VN NW 40 HL VA	L	PN 160	42	1.1/2" -11,5 NPT	26,0	65,0	42,0	55	60
VN NW 03 HS 1/8 VA	S	PN 630	6	1/8" -27 NPT	10,0	36,0	21,0	14	17
VN NW 03 HS VA	S	PN 630	6	1/4" -18 NPT	15,0	43,0	28,0	17	17
VN NW 03 HS 3/8 VA	S	PN 630	6	3/8" -18 NPT	15,3	41,0	26,0	19	17
VN NW 03 HS 1/2 VA	S	PN 630	6	1/2" -14 NPT	20,0	50,0	35,0	24	17
VN NW 04 HS 1/8 VA	S	PN 630	8	1/8" -27 NPT	10,0	38,0	23,0	17	19
VN NW 04 HS VA	S	PN 630	8	1/4" -18 NPT	15,0	43,0	28,0	17	19
VN NW 04 HS 3/8 VA	S	PN 630	8	3/8" -18 NPT	15,5	43,0	28,0	19	19
VN NW 04 HS 1/2 VA	S	PN 630	8	1/2" -14 NPT	20,0	50,0	35,0	22	19
VN NW 06 HS 1/8 VA	S	PN 630	10	1/8" -27 NPT	10,0	39,0	22,5	19	22
VN NW 06 HS 1/4 VA	S	PN 630	10	1/4" -18 NPT	15,0	44,0	27,5	19	22
VN NW 06 HS VA	S	PN 630	10	3/8" -18 NPT	15,5	44,0	27,5	19	22
VN NW 06 HS 1/2 VA	S	PN 400	10	1/2" -14 NPT	20,0	51,0	34,5	24	22
VN NW 06 HS 3/4 VA	S	PN 630	10	3/4" -14 NPT	20,0	53,0	36,5	27	22
VN NW 08 HS 1/4 VA	S	PN 630	12	1/4" -18 NPT	15,1	46,0	29,5	22	24
VN NW 08 HS VA	S	PN 630	12	3/8" -18 NPT	15,5	46,0	29,5	22	24
VN NW 08 HS 1/2 VA	S	PN 630	12	1/2" -14 NPT	20,0	51,0	34,5	24	24
VN NW 08 HS 3/4 VA	S	PN 630	12	3/4" -14 NPT	20,0	53,0	36,5	27	24
VN NW 10 HS 3/8 VA	S	PN 630	14	3/8" -18 NPT	15,5	54,0	36,0	19	27
VN NW 10 HS VA	S	PN 630	14	1/2" -14 NPT	20,0	54,0	36,0	24	27
VN NW 10 HS 3/4 VA	S	PN 630	14	3/4" -14 NPT	20,0	56,0	38,0	27	27
VN NW 10 HS 1 VA	S	PN 630	14	1" -11,5 NPT	24,5	61,0	43,0	36	27
VN NW 13 HS 3/8 VA	S	PN 400	16	3/8" -18 NPT	15,3	49,0	30,5	27	30
VN NW 13 HS VA	S	PN 400	16	1/2" -14 NPT	20,0	54,0	35,5	27	30
VN NW 13 HS 3/4 VA	S	PN 400	16	3/4" -14 NPT	20,0	56,0	37,5	30	30
VN NW 13 HS 1 VA	S	PN 400	16	1" -11,5 NPT	25,0	63,0	44,5	36	30
VN NW 16 HS 3/8 VA	S	PN 400	20	3/8" -18 NPT	15,3	54,5	33,0	32	36
VN NW 16 HS 1/2 VA	S	PN 400	20	1/2" -14 NPT	20,0	59,0	37,5	32	30
VN NW 16 HS VA	S	PN 400	20	3/4" -14 NPT	20,0	59,0	37,5	32	36
VN NW 16 HS 1 VA	S	PN 400	20	1" -11,5 NPT	25,0	66,0	44,5	36	36
VN NW 16 HS 1 1/4 VA	S	PN 400	20	1.1/4" -11,5 NPT	25,5	67,0	45,5	46	36
VN NW 20 HS 1/2 VA	S	PN 400	25	1/2" -14 NPT	20,0	64,0	40,0	41	46
VN NW 20 HS 3/4 VA	S	PN 400	25	3/4" -14 NPT	20,0	64,0	40,0	41	46
VN NW 20 HS VA	S	PN 400	25	1" -11,5 NPT	25,0	69,0	45,0	41	46
VN NW 20 HS 1 1/4 VA	S	PN 400	25	1.1/4" -11,5 NPT	25,5	69,0	45,5	46	46
VN NW 20 HS 1 1/2 VA	S	PN 400	25	1.1/2" -11,5 NPT	26,0	73,0	49,0	50	46
VN NW 25 HS 3/4 VA	S	PN 400	30	3/4" -14 NPT	20,0	67,0	40,5	46	50
VN NW 25 HS 1 VA	S	PN 400	30	1" -11,5 NPT	25,0	66,5	40,0	46	50
VN NW 25 HS VA	S	PN 400	30	1.1/4" -11,5 NPT	25,5	73,0	46,5	46	50
VN NW 25 HS 1 1/2 VA	S	PN 400	30	1.1/2" -11,5 NPT	26,0	73,0	46,5	55	50
VN NW 32 HS 1 VA	S	PN 315	38	1" -11,5 NPT	25,0	79,0	48,0	55	60
VN NW 32 HS 1 1/4 VA	S	PN 315	38	1.1/4" -11,5 NPT	25,5	80,0	49,0	55	60
VN NW 32 HS VA	S	PN 315	38	1.1/2" -11,5 NPT	26,0	80,0	49,0	55	60

Serija: LL = veoma lako L = lako S = teško – PN = nominalni pritisak PB = maks. radni pritisak – Ø = spoljni prečnik cevi

Varijante proizvoda

VN	Uvrtni navojni spoj, čelik
VN MG	Uvrtni navojni spoj, Mesing
XVN VA	Uvrtni navojni spoj, plemeniti čelik

Uprkos pažljivom proveravanju, ne možemo isključiti greške i ne preuzimamo nikakvu garanciju za navedene podatke.