W90 HRO L HJ

Uvrtni nastavak, dugi, ugao 90°

Osobine

Priključak 1	BSP spoljni cilindrični navoj
Oblik zaptivke 1	oblik G
Priključak 2	UN/UNF spoljni navoj
Oblik zaptivke 2	74° spoljašnji konus
Konstrukcija	Uvrtni navojni nastavak, dugi
Konstrukcija	ugao 90°
Materijal	čelik
Površinska zaštita	galvanska prevlaka



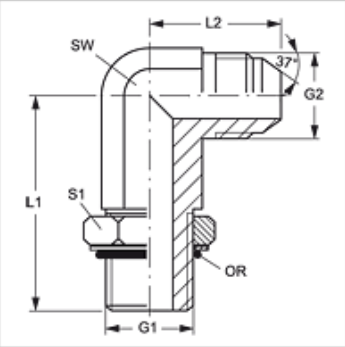

Artikal

Naziv	G1	G2	SW (mm)	L1 (mm)	L2 (mm)	S1	OR
W90 HRO L 04 HJ 06	G 1/4" -19	9/16" -18 UNF	14	56,5	27,0	19	8,00 x 2,00
W90 HRO L 04 HJ 08	G 1/4" -19	3/4" -16 UNF	19	64,0	31,5	19	8,00 x 2,00
W90 HRO L 06 HJ	G 3/8" -19	9/16" -18 UNF	19	67,0	28,5	22	13,94 x 2,62
W90 HRO L 06 HJ 08	G 3/8" -19	3/4" -16 UNF	19	67,0	31,5	22	13,94 x 2,62
W90 HRO L 06 HJ 10	G 3/8" -19	7/8" -14 UNF	22	75,0	36,5	22	17,86 x 2,62
W90 HRO L 08 HJ 06	G 1/2" -14	9/16" -18 UNF	22	78,0	31,0	27	17,86 x 2,62
W90 HRO L 08 HJ	G 1/2" -14	3/4" -16 UNF	22	78,0	34,0	27	17,86 x 2,62
W90 HRO L 08 HJ 10	G 1/2" -14	7/8" -14 UNF	22	78,0	36,5	27	17,86 x 2,62
W90 HRO L 08 HJ 12	G 1/2" -14	1.1/16" -12 UN	27	88,0	42,0	27	17,86 x 2,62
W90 HRO L 12 HJ 10	G 3/4" -14	7/8" -14 UNF	27	92,0	39,5	36	23,47 x 2,62
W90 HRO L 12 HJ	G 3/4" -14	1.1/16" -12 UN	27	92,0	42,0	36	23,47 x 2,62
W90 HRO L 12 HJ 16	G 3/4" -14	1.5/16" -12 UN	33	105,0	46,0	36	23,47 x 2,62
W90 HRO L 16 HJ 12	G 1" -11	1.1/16" -12 UN	33	105,0	44,5	41	29,74 x 3,53
W90 HRO L 16 HJ	G 1" -11	1.5/16" -12 UN	33	105,0	46,0	41	29,74 x 3,53
W90 HRO L 16 HJ 20	G 1" -11	1.5/8" -12 UN	41	124,0	52,0	41	29,74 x 3,53

SW, S1, S2 = veličina ključa

Uprkos pažljivom proveravanju, ne možemo isključiti greške i ne preuzimamo nikakvu garanciju za navedene podatke.