# G VKS ST 400

Četvorougaona prirubnica Cetop, venac za zavarivanje

HANSA-FLEX

## Osobine

| | |
|---|---|
| **Konstrukcija** | Četvorougaona prirubnica Cetop |
| **Konstrukcija** | pravo |
| **Norma** | CETOP RP 63H<br>ISO 6164 |
| **Materijal** | S355J2G3 (ST52.3) |
| **Površinska zaštita** | crno nauljen |



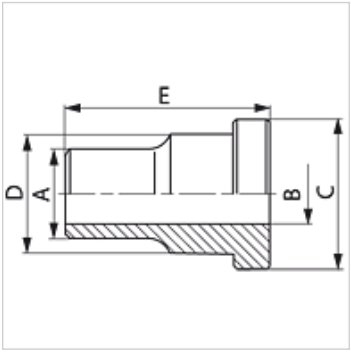


## Artikal

| Naziv | Pritisak PB (bar) | Konstrukciona veličina | A (mm) | Ø B (mm) | C (mm) | D (mm) | E (mm) |
|---|---|---|---|---|---|---|---|
| **G VKS 38 ST 400** | 400 | 3/8" | 18 | 11,0 | 26,0 | 18 | 35 |
| **G VKS 12 ST 400** | 400 | 1/2" | 22 | 14,0 | 31,8 | 24 | 40 |
| **G VKS 34 ST 400** | 400 | 3/4" | 28 | 18,0 | 39,5 | 32 | 45 |
| **G VKS 1 ST 400** | 400 | 1" | 35 | 22,0 | 47,6 | 38 | 50 |
| **G VKS 114 ST 400** | 400 | 1.1/4" | 44 | 29,0 | 54,0 | 44 | 55 |
| **G VKS 112 ST 400** | 400 | 1.1/2" | 51 | 35,0 | 63,5 | 51 | 60 |
| **G VKS 2 ST 400** | 400 | 2" | 61 | 43,0 | 79,4 | 67 | 70 |
| **G VKS 212 ST 400** | 400 | 2.1/2" | 80 | 53,0 | 94,2 | 60 | 80 |
| **G VKS 3 ST 400** | 400 | 3" | 90 | 58,0 | 104,0 | 90 | 90 |
| **G VKS 312 ST 400** | 400 | 3.1/2" | 102 | 63,0 | 119,0 | 102 | 90 |
| **G VKS 4 ST 400** | 400 | 4" | 114 | 74,0 | 131,0 | 114 | 105 |

Serija: LL = veoma lako  L = lako  S = teško  –  PN = nominalni pritisak  PB = maks. radni pritisak

*Uprkos pažljivom proveravanju, ne možemo isključiti greške i ne preuzimamo nikakvu garanciju za navedene podatke.*