G HB IR
Navrtni nastavak

Osobine

Priključak 1	BSP spoljni cilindrični navoj
Oblik zaptivke 1	60° unutrašnji konus
Priključak 2	BSP unutrašnji cilindrični navoj
Oblik zaptivke 2	ravno zaptivanje
Konstrukcija	Screw-on socket
Konstrukcija	pravo
Materijal	čelik
Površinska zaštita	galvanska prevlaka



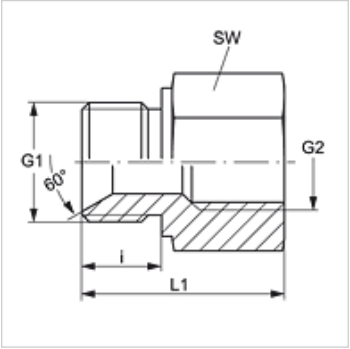

Artikal

Naziv	G1	G2	SW (mm)
G HB 02 IR	G 1/8" -28	G 1/8" -28	17
G HB 02 IR 04	G 1/8" -28	G 1/4" -19	19
G HB 04 IR 02	G 1/4" -19	G 1/8" -28	19
G HB 04 IR	G 1/4" -19	G 1/4" -19	19
G HB 04 IR 06	G 1/4" -19	G 3/8" -19	24
G HB 04 IR 08	G 1/4" -19	G 1/2" -14	27
G HB 06 IR 02	G 3/8" -19	G 1/8" -28	24
G HB 06 IR 04	G 3/8" -19	G 1/4" -19	22
G HB 06 IR	G 3/8" -19	G 3/8" -19	24
G HB 06 IR 08	G 3/8" -19	G 1/2" -14	27
G HB 08 IR 02	G 1/2" -14	G 1/8" -28	27
G HB 08 IR 04	G 1/2" -14	G 1/4" -19	27
G HB 08 IR 06	G 1/2" -14	G 3/8" -19	27
G HB 08 IR	G 1/2" -14	G 1/2" -14	27
G HB 08 IR 12	G 1/2" -14	G 3/4" -14	36
G HB 12 IR 04	G 3/4" -14	G 1/4" -19	32
G HB 12 IR 06	G 3/4" -14	G 3/8" -19	32
G HB 12 IR 08	G 3/4" -14	G 1/2" -14	32
G HB 12 IR	G 3/4" -14	G 3/4" -14	36
G HB 12 IR 16	G 3/4" -14	G 1" -11	41
G HB 16 IR 06	G 1" -11	G 3/8" -19	41
G HB 16 IR 08	G 1" -11	G 1/2" -14	41
G HB 16 IR 12	G 1" -11	G 3/4" -14	41
G HB 16 IR	G 1" -11	G 1" -11	41
G HB 16 IR 20	G 1" -11	G 1.1/4" -11	50
G HB 20 IR 04	G 1.1/4" -11	G 1/4" -19	50
G HB 20 IR 08	G 1.1/4" -11	G 1/2" -14	50
G HB 20 IR 12	G 1.1/4" -11	G 3/4" -14	50
G HB 20 IR 16	G 1.1/4" -11	G 1" -11	41
G HB 20 IR	G 1.1/4" -11	G 1.1/4" -11	50
G HB 20 IR 24	G 1.1/4" -11	G 1.1/2" -11	55
G HB 24 IR 12	G 1.1/2" -11	G 3/4" -14	55
G HB 24 IR 20	G 1.1/2" -11	G 1.1/4" -11	55
G HB 24 IR	G 1.1/2" -11	G 1.1/2" -11	55
G HB 24 IR 16	G 1.1/2" -11	G 1" -11	55
G HB 24 IR 32	G 1.1/2" -11	G 2" -11	70
G HB 32 IR 16	G 2" -11	G 1" -11	70
G HB 32 IR 20	G 2" -11	G 1.1/4" -11	70
G HB 32 IR 24	G 2" -11	G 1.1/2" -11	70
G HB 32 IR	G 2" -11	G 2" -11	70

SW = veličina ključa

Varijante proizvoda

G HB IR VA	Navrtni nastavak, plemeniti čelik

Uprkos pažljivom proveravanju, ne možemo isključiti greške i ne preuzimamo nikakvu garanciju za navedene podatke.