# GE HROK L HJ

Uvrtni navojni nastavak, dugi

## Osobine

| | |
|---|---|
| **Priključak 1** | BSP spoljni cilindrični navoj |
| **Oblik zaptivke 1** | Navojni nastavak sa O-prstenom + komorni prsten |
| **Priključak 2** | UN/UNF spoljni navoj |
| **Oblik zaptivke 2** | 74° spoljašnji konus |
| **Konstrukcija** | Uvrtni navojni nastavak, dugi |
| **Konstrukcija** | pravo |
| **Materijal** | čelik |
| **Površinska zaštita** | galvanska prevlaka |



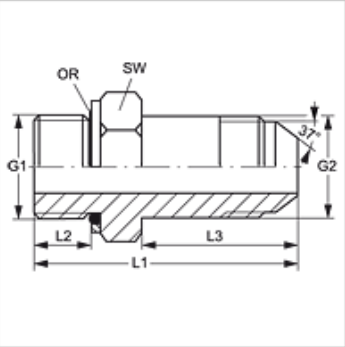


## Artikal

| Naziv | G1 | G2 | L1 (mm) | L2 (mm) | L3 (mm) | SW (mm) | OR |
|---|---|---|---|---|---|---|---|
| **GE HROK L 02 HJ 04** | G 1/8" -28 | 7/16" -20 UNF | 50,0 | 7,0 | 35 | 16 | 7,65 x 1,78 |
| **GE HROK L 04 HJ** | G 1/4" -19 | 7/16" -20 UNF | 55,5 | 10,0 | 35 | 20 | 10,78 x 2,62 |
| **GE HROK L 04 HJ 05** | G 1/4" -19 | 1/2" -20 UNF | 57,5 | 10,0 | 37 | 20 | 10,78 x 2,62 |
| **GE HROK L 04 HJ 06** | G 1/4" -19 | 9/16" -18 UNF | 59,5 | 10,0 | 39 | 20 | 10,78 x 2,62 |
| **GE HROK L 04 HJ 08** | G 1/4" -19 | 3/4" -16 UNF | 68,5 | 10,0 | 48 | 20 | 10,78 x 2,62 |
| **GE HROK L 06 HJ** | G 3/8" -19 | 9/16" -18 UNF | 59,5 | 10,0 | 39 | 24 | 13,94 x 2,62 |
| **GE HROK L 06 HJ 05** | G 3/8" -19 | 1/2" -20 UNF | 57,5 | 10,0 | 37 | 24 | 13,94 x 2,62 |
| **GE HROK L 06 HJ 08** | G 3/8" -19 | 3/4" -16 UNF | 68,5 | 10,0 | 48 | 24 | 13,94 x 2,62 |
| **GE HROK L 06 HJ 10** | G 3/8" -19 | 7/8" -14 UNF | 74,0 | 10,0 | 53 | 24 | 13,94 x 2,62 |
| **GE HROK L 08 HJ** | G 1/2" -14 | 3/4" -16 UNF | 72,0 | 12,0 | 48 | 28 | 17,86 x 2,62 |
| **GE HROK L 08 HJ 06** | G 1/2" -14 | 9/16" -18 UNF | 63,0 | 12,0 | 39 | 28 | 17,86 x 2,62 |
| **GE HROK L 08 HJ 10** | G 1/2" -14 | 7/8" -14 UNF | 77,0 | 12,0 | 53 | 28 | 17,86 x 2,62 |
| **GE HROK L 08 HJ 12** | G 1/2" -14 | 1.1/16" -12 UN | 88,0 | 12,0 | 63 | 28 | 17,86 x 2,62 |
| **GE HROK L 12 HJ** | G 3/4" -14 | 1.1/16" -12 UN | 91,0 | 14,0 | 63 | 35 | 23,47 x 2,62 |
| **GE HROK L 12 HJ 10** | G 3/4" -14 | 7/8" -14 UNF | 81,0 | 14,0 | 53 | 35 | 23,47 x 2,62 |
| **GE HROK L 12 HJ 16** | G 3/4" -14 | 1.5/16" -12 UN | 100,0 | 14,0 | 72 | 36 | 23,47 x 2,62 |
| **GE HROK L 16 HJ** | G 1" -11 | 1.5/16" -12 UN | 102,0 | 15,5 | 72 | 43 | 29,74 x 3,53 |
| **GE HROK L 16 HJ 12** | G 1" -11 | 1.1/16" -12 UN | 93,5 | 15,5 | 63 | 43 | 29,74 x 3,53 |
| **GE HROK L 16 HJ 20** | G 1" -11 | 1.5/8" -12 UN | 119,0 | 15,5 | 88 | 43 | 29,74 x 3,53 |
| **GE HROK L 20 HJ** | G 1.1/4" -11 | 1.5/8" -12 UN | 122,0 | 17,5 | 88 | 52 | 37,69 x 3,53 |
| **GE HROK L 20 HJ 16** | G 1.1/4" -11 | 1.5/16" -12 UN | 106,0 | 17,5 | 72 | 52 | 37,69 x 3,53 |
| **GE HROK L 20 HJ 24** | G 1.1/4" -11 | 1.7/8" -12 UN | 132,0 | 17,5 | 98 | 52 | 37,69 x 3,53 |
| **GE HROK L 24 HJ** | G 1.1/2" -11 | 1.7/8" -12 UN | 136,0 | 19,5 | 98 | 58 | 44,04 x 3,53 |

SW = veličina ključa

## Rezervni delovi

| | |
|---|---|
| **KAMMRING G** | Komorni prsten, colovan |

*Uprkos pažljivom proveravanju, ne možemo isključiti greške i ne preuzimamo nikakvu garanciju za navedene podatke.*