KLEMMSCHEL
Clamp, Aluminium

Osobine

Primena	Clamping components for small flange connections
Verzija	Clamp aluminum
Norma	DIN 28403 ISO 2861
Materijal	Aluminijum
Temperaturni opseg	Aluminijum od -156 °C do 150 °C



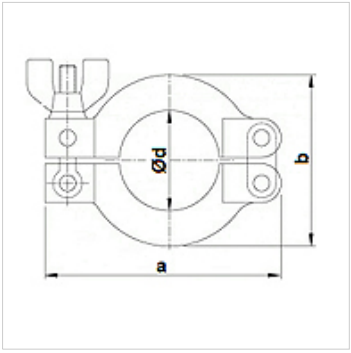

Napomena

Opseg pritiska od 10−7 mbar do 2,5 bar

Napomene u vezi porudžbine

Ostali modeli na zahtev

Artikal

Naziv	Širina (mm)	a (mm)	b (mm)	Ø d (mm)
KLEMMSCHEL 010/16	17,0	63,0	45,0	22,0
KLEMMSCHEL 020/25	17,0	73,0	52,0	32,0
KLEMMSCHEL 032/40	17,0	93,0	70,0	47,0
KLEMMSCHEL 050	22,0	114,0	95,0	62,0

Uprkos pažljivom proveravanju, ne možemo isključiti greške i ne preuzimamo nikakvu garanciju za navedene podatke.