# PW U

Skidač, PW-U

## Osobine

| | |
|---|---|
| **Brzina max.** | 0,5 m/s |
| **Temperatura min.** | -30 °C |
| **Temperatura max.** | 80 °C |
| **Mediji** | Mineralna ulja |
| **Montaža** | utiskuje se u otvoreni žleb |
| **Materijal** | (1) Čaura: čelik<br>(2) Skidač: PUR |
| **Primena** | Hidraulika |

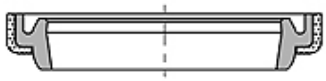

| Toleranz / Tolerance | | |
|---|---|---|
| d | D | L |
| h11 | H8 | +0,20<br>0 |

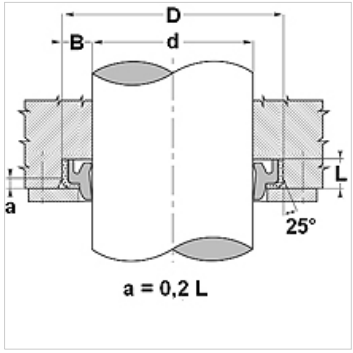


## Opis

Mala potreba za prostorom
veoma otporno na habanje
Jednostavno rešenje.

## Artikal

| Naziv | d (mm) | D (mm) | L (mm) |
|---|---|---|---|
| **PW 20-U** | 20 | 32 | 6,0 |
| **PW 22-U** | 22 | 34 | 6,0 |
| **PW 25-U** | 25 | 37 | 6,0 |
| **PW 30-U** | 30 | 42 | 6,0 |
| **PW 35-U** | 35 | 47 | 7,0 |
| **PW 40-U** | 40 | 52 | 7,0 |
| **PW 45-U** | 45 | 57 | 7,0 |
| **PW 50-U** | 50 | 62 | 7,0 |
| **PW 55-U** | 55 | 69 | 8,0 |
| **PW 60-U** | 60 | 74 | 8,0 |
| **PW 65-U** | 65 | 79 | 8,0 |
| **PW 70-U** | 70 | 84 | 8,0 |
| **PW 75-U** | 75 | 89 | 8,0 |
| **PW 80-U** | 80 | 94 | 8,0 |
| **PW 85-U** | 85 | 99 | 8,0 |
| **PW 90-U** | 90 | 104 | 8,0 |
| **PW 95-U** | 95 | 109 | 8,0 |
| **PW 100-U** | 100 | 114 | 8,0 |
| **PW 105-U** | 105 | 121 | 9,0 |
| **PW 110-U** | 110 | 126 | 9,0 |
| **PW 120-U** | 120 | 136 | 9,0 |

*Uprkos pažljivom proveravanju, ne možemo isključiti greške i ne preuzimamo nikakvu garanciju za navedene podatke.*