# PR V1 (M)

Precizna čelična cev, metrički, 1.4301

HANSA-FLEX

## Osobine

| | |
|---|---|
| **Konstrukcija** | Precizna čelična cev, metrička |
| **Materijal** | Plemeniti čelik 1.4301 |
| **Dužina cevi** | 6 metara |

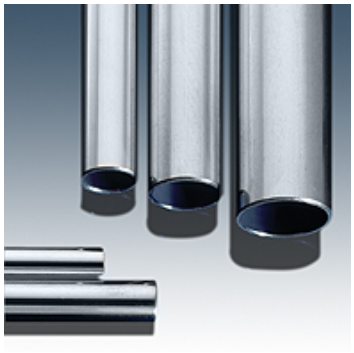

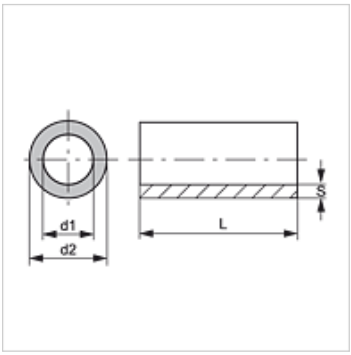


## Artikal

| Naziv | Ø d2 (mm) | AD tolerancija +/- (mm) | Ø d1 (mm) | S (mm) | ID tolerancija +/- (mm) | Slučaj opterećenja I (bar) | Slučaj opterećenja III (bar) |
|---|---|---|---|---|---|---|---|
| **PR 12-2.5 V1** | 12,0 | - | 7,0 | 2,50 | - | - | - |
| **PR 14-2.5 V1** | 14,0 | - | 9,0 | 2,50 | - | - | - |
| **PR 18-3 V1** | 18,0 | - | 12,0 | 3,00 | - | - | - |
| **PR 04-1 V1** | 4,0 | 0,08 | 2,0 | 1,00 | 0,15 | 558 | 376 |
| **PR 05-1 V1** | 5,0 | 0,08 | 3,0 | 1,00 | 0,15 | 447 | 311 |
| **PR 06-1 V1** | 6,0 | 0,08 | 4,0 | 1,00 | 0,15 | 372 | 265 |
| **PR 06-1.5 V1** | 6,0 | 0,08 | 3,0 | 1,50 | 0,15 | 610 | 405 |
| **PR 08-1 V1** | 8,0 | 0,08 | 6,0 | 1,00 | 0,15 | 279 | 204 |
| **PR 08-1.5 V1** | 8,0 | 0,08 | 5,0 | 1,50 | 0,15 | 460 | 319 |
| **PR 10-1 V1** | 10,0 | 0,08 | 8,0 | 1,00 | 0,15 | 223 | 166 |
| **PR 10-1.5 V1** | 10,0 | 0,08 | 7,0 | 1,50 | 0,15 | 369 | 262 |
| **PR 12-1 V1** | 12,0 | 0,08 | 10,0 | 1,00 | 0,15 | 186 | 140 |
| **PR 12-1.5 V1** | 12,0 | 0,08 | 9,0 | 1,50 | 0,15 | 307 | 223 |
| **PR 12-2 V1** | 12,0 | 0,08 | 8,0 | 2,00 | 0,15 | 428 | 299 |
| **PR 12-3 V1** | 12,0 | 0,08 | 6,0 | 3,00 | 0,15 | 670 | 436 |
| **PR 14-2 V1** | 14,0 | 0,08 | 10,0 | 2,00 | 0,15 | 367 | 261 |
| **PR 14-3 V1** | 14,0 | 0,08 | 8,0 | 3,00 | 0,15 | 575 | 395 |
| **PR 15-1.5 V1** | 15,0 | 0,08 | 12,0 | 1,50 | 0,15 | 246 | 182 |
| **PR 16-1 V1** | 16,0 | 0,08 | 14,0 | 1,00 | 0,08 | 152 | 115 |
| **PR 16-2 V1** | 16,0 | 0,08 | 12,0 | 2,00 | 0,15 | 321 | 232 |
| **PR 18-1 V1** | 18,0 | 0,08 | 16,0 | 1,00 | 0,08 | 135 | 104 |
| **PR 18-1.5 V1** | 18,0 | 0,08 | 15,0 | 1,50 | 0,08 | 216 | 161 |
| **PR 18-2 V1** | 18,0 | 0,08 | 14,0 | 2,00 | 0,08 | 297 | 216 |
| **PR 22-1 V1** | 22,0 | 0,08 | 20,0 | 1,00 | 0,08 | 110 | 85 |
| **PR 20-2 V1** | 20,0 | 0,08 | 16,0 | 2,00 | 0,15 | 257 | 189 |
| **PR 22-1.5 V1** | 22,0 | 0,08 | 19,0 | 1,50 | 0,08 | 176 | 133 |
| **PR 22-2 V1** | 22,0 | 0,08 | 18,0 | 2,00 | 0,15 | 233 | 173 |
| **PR 24-2 V1** | 24,0 | 0,08 | 20,0 | 2,00 | 0,15 | 214 | 160 |
| **PR 25-5 V1** | 25,0 | 0,08 | 15,0 | 5,00 | 0,15 | 554 | 373 |
| **PR 28-1 V1** | 28,0 | 0,08 | 26,0 | 1,00 | 0,08 | 87 | 67 |
| **PR 28-2 V1** | 28,0 | 0,08 | 24,0 | 2,00 | 0,08 | 191 | 143 |
| **PR 28-3 V1** | 28,0 | 0,08 | 22,0 | 3,00 | 0,15 | 287 | 210 |
| **PR 28-4 V1** | 28,0 | 0,15 | 20,0 | 4,00 | 0,15 | 384 | 272 |
| **PR 30-2 V1** | 30,0 | 0,08 | 26,0 | 2,00 | 0,08 | 178 | 134 |
| **PR 30-3 V1** | 30,0 | 0,08 | 24,0 | 3,00 | 0,08 | 275 | 201 |
| **PR 30-4 V1** | 30,0 | 0,15 | 22,0 | 4,00 | 0,15 | 358 | 256 |
| **PR 30-5 V1** | 30,0 | 0,15 | 20,0 | 5,00 | 0,20 | 450 | 313 |
| **PR 38-4 V1** | 38,0 | - | 30,0 | 4,00 | - | - | - |
| **PR 40-4 V1** | 40,0 | 0,15 | 32,0 | 4,00 | 0,20 | 265 | 195 |
| **PR 40-5 V1** | 40,0 | 0,15 | 30,0 | 5,00 | 0,20 | 337 | 243 |
| **PR 50-1.5 V1** | 50,0 | 0,20 | 47,0 | 1,50 | 0,20 | 63 | 50 |
| **PR 50-2 V1** | 50,0 | 0,20 | 46,0 | 2,00 | 0,20 | 93 | 72 |
| **PR 57-2 V1** | 57,0 | 0,25 | 53,0 | 2,00 | 0,25 | 76 | 59 |
| **PR 64-2 V1** | 64,0 | 0,25 | 60,0 | 2,00 | 0,25 | 68 | 53 |
| **PR 70-2 V1** | 70,0 | 0,25 | 66,0 | 2,00 | 0,25 | 62 | 48 |

*Uprkos pažljivom proveravanju, ne možemo isključiti greške i ne preuzimamo nikakvu garanciju za navedene podatke.*