K-ELEKTRO-KABELAUFROLL POM

Electrical cable reels (POM) easy mounting on the wall or ceiling

HANSA FLEX

Osobine

Kabl	PVC 3 x 1.5 mm2
Jačina struje	Max. 16 A
Priključak	SchuKo plug
Apsorbovanje snage	Max. 1000 W (fully wound), max. 3500 W (fully unwound)



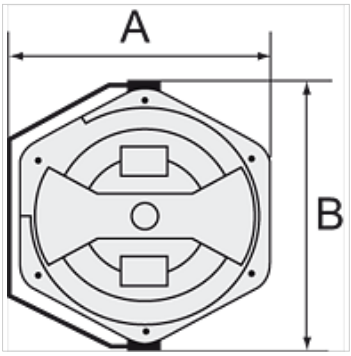

Napomena

Ostali podaci na upit.

Opis

Closed, rugged, impact-resistant housing made of POM. Includes a thermal circuit breaker. In case of overloading, a thermal overload protective circuit cuts off the electrical power supply automatically.

Artikal

Naziv	A (mm)	B (mm)	Dužina (m)	Napon
K- 07 10 03 46	394,5	436,0	10	max. 230V
K- 07 10 03 47	394,5	436,0	17	max. 230V

Uprkos pažljivom proveravanju, ne možemo isključiti greške i ne preuzimamo nikakvu garanciju za navedene podatke.