# K-3 BKR L VA

3-way ball valves, L-bore

## Osobine

| | |
|---|---|
| **Radni pritisak** | max. 63 bar |
| **Radna temperatura** | max. 160 °C |
| **Otvor** | L oblik |
| **Referentne vrednosti** | Up to 40 °C: 63 bar, 150 °C: 28 bar |
| **Zaptivka** | RTFE |
| **Ručna poluga** | Stainless steel |
| **Kuglični ventil** | Stainless steel 1.4408 |



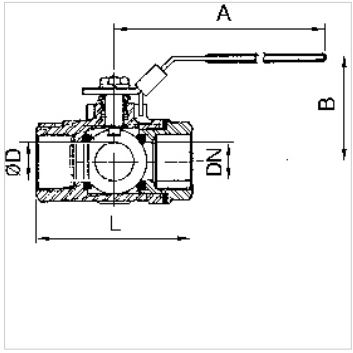


## Napomena

G thread acc. to DIN EN ISO 228-1, with ISO flange plate (acc. to ISO 5211)
Ostali podaci na upit.

## Opis

With L-bore, reduced bore. Version for sealing on all sides with integrated ISO flange plate (ISO 5211). The lever can be turned 360° to allow several switching variants.

## Napomene u vezi porudžbine

For use on devices that have to be vented whenever they are turned off, either because of safety regulations or for technical reasons. The pneumatic devices are disconnected from the system and simultaneously vented each time they are shut off.

## Dodatne informacije

G thread acc. DIN EN ISO 228-1

## Artikal

| Naziv | DN | Navoj | A (mm) | B (mm) | L (mm) | Ø D (mm) |
|---|---|---|---|---|---|---|
| **K- 07 30 15 02** | 8 | G 1/4 | 114,0 | 73,0 | 80,0 | 11,0 |
| **K- 07 30 15 03** | 10 | G 3/8 | 114,0 | 73,0 | 80,0 | 11,0 |
| **K- 07 30 15 04** | 15 | G 1/2 | 114,0 | 73,0 | 80,0 | 12,5 |
| **K- 07 30 15 05** | 20 | G 3/4 | 133,0 | 78,0 | 87,0 | 16,0 |
| **K- 07 30 15 06** | 25 | G 1 | 133,0 | 83,0 | 100,0 | 20,0 |
| **K- 07 30 15 07** | 32 | G 1 1/4 | 187,0 | 92,0 | 123,0 | 25,0 |
| **K- 07 30 15 08** | 40 | G 1 1/2 | 187,0 | 98,0 | 142,0 | 31,8 |
| **K- 07 30 15 09** | 50 | G 2 | 187,0 | 126,0 | 170,0 | 38,1 |

*Uprkos pažljivom proveravanju, ne možemo isključiti greške i ne preuzimamo nikakvu garanciju za navedene podatke.*