K-BKR EINTEILIG VA

Ball valves

Osobine

Radni pritisak	max. 55 bar (depending on connection size and temperature)
Radna temperatura	Max. 150 °C
Zaptivka	PTFE
Ručna poluga	Stainless steel 1.4301

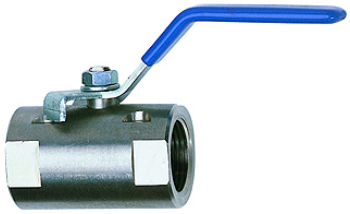

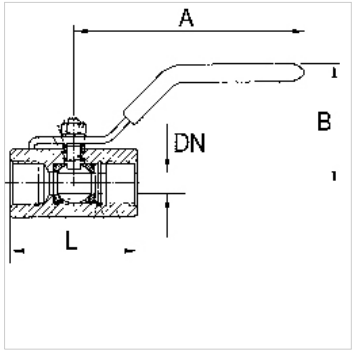

Napomena

G thread acc. to DIN EN ISO 228-1, with ISO flange plate (acc. to ISO 5211)
Ostali podaci na upit.

Opis

Full bore with G 1/4 to G 3/8, reduced bore with G 1/2 to G 2

Napomene u vezi porudžbine

For use on devices that have to be vented whenever they are turned off, either because of safety regulations or for technical reasons. The pneumatic devices are disconnected from the system and simultaneously vented each time they are shut off.

Artikal

Naziv	DN	Navoj	A (mm)	B (mm)	L (mm)	Materijal
K- 07 30 14 94	5	G 1/4	60,0	30,0	39,8	Stainless steel 1.4401/1.4408
K- 07 30 14 95	7	G 3/8	80,0	33,0	44,8	Stainless steel 1.4401/1.4408
K- 07 30 14 96	9	G 1/2	110,0	57,0	56,5	Stainless steel 1.4401/1.4408
K- 07 30 14 97	13	G 3/4	110,0	61,0	60,0	Stainless steel 1.4401/1.4408
K- 07 30 14 98	15	G 1	124,0	70,0	70,0	Stainless steel 1.4401/1.4408
K- 07 30 14 99	20	G 1 1/4	152,0	75,0	77,6	Stainless steel 1.4401/1.4408
K- 07 30 15 00	25	G 1 1/2	150,0	80,0	87,0	Stainless steel 1.4401/1.4408
K- 07 30 15 01	32	G 2	155,0	85,0	102,0	Stainless steel 1.4401/1.4408

Uprkos pažljivom proveravanju, ne možemo isključiti greške i ne preuzimamo nikakvu garanciju za navedene podatke.