K-ABBLV 2

Blow-off safety valves G 1/4

Osobine

Radni pritisak	0.5 - 60 bar
Radna temperatura	max. 180 °C
Zaptivke	FKM
Kućište	Brass



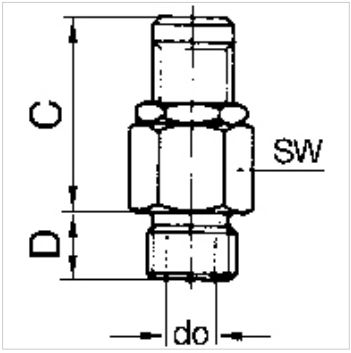

Napomena

G thread acc. to DIN EN ISO 228-1, with ISO flange plate (acc. to ISO 5211)
Ostali podaci na upit.

Opis

Manual adjustment of the blow-off pressure (lock nut).

Napomene u vezi porudžbine

For use on devices that have to be vented whenever they are turned off, either because of safety regulations or for technical reasons. The pneumatic devices are disconnected from the system and simultaneously vented each time they are shut off.

Dodatne informacije

These blow-off valves can also be supplied with a fixed setting and a TÜV type test number. Please ask for an offer.

Artikal

Naziv	Navoj	Proradni pritisak	Kapacitet produvavanja	C (mm)	D (mm)	do (mm)	SW (mm)
K- 07 30 29 18	G 1/4	0.5 - 1.0 bar	to 50 l/min	27,0	7,0	3,0	16
K- 07 30 21 95	G 1/4	1.0 - 4.0 bar	to 200 l/min	27,0	7,0	3,0	16
K- 07 30 21 96	G 1/4	3.0 - 7.0 bar	to 350 l/min	27,0	7,0	3,0	16
K- 07 30 21 97	G 1/4	6.0 - 12.0 bar	to 650 l/min	27,0	7,0	3,0	16
K- 07 30 21 98	G 1/4	10.0 - 18.0 bar	to 870 l/min	27,0	7,0	3,0	16
K- 07 30 21 99	G 1/4	16.0 - 32.0 bar	to 1600 l/min	27,0	7,0	3,0	16
K- 07 30 22 00	G 1/4	30.0 - 60.0 bar	to 3000 l/min	27,0	7,0	3,0	16

Uprkos pažljivom proveravanju, ne možemo isključiti greške i ne preuzimamo nikakvu garanciju za navedene podatke.