K-ANFAV MULTIFIX

Start-up valves

Osobine

Ulazni pritisak	Min. 2 bar, max. 16 bar
Temperatura medija	max. 60 °C
Temperatura okoline	Max. 60 °C
Zaptivni materijal	NBR
Kućište	Die-cast zinc, Aluminium for G 3/4 and G 1 variant
Merenje vrednosti protoka	At P1 = 6 bar and pressure drop Δp = 1 bar



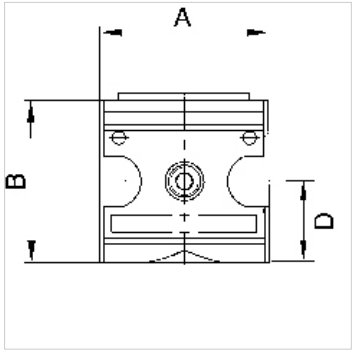

Napomena

Ostali podaci na upit.

Opis

Seat valves operated by secondary pressure for controlled pressurisation of pneumatic systems. The full cross-section of the regulator is opened at 50% of the input pressure. The filling time can be altered by turning the adjusting screw.

Artikal

Naziv	Navoj	Protok (L/min)	A (mm)	B	D (mm)
K- 07 25 11 54	G 1/4	1000	47,8	54,2 mm	26,8
K- 07 25 11 55	G 1/2	4000	68,8	71,6 mm	35,1
K- 07 25 19 34	G 3/4	12000	99,7	104,0 mm	52,0
K- 07 25 19 35	G 1	12000	99,7	104,0 mm	52,0

Rezervni delovi

K-KOPPELPAKET MEHR	Coupling packet
K-KOPPELPAKET SCHMA	Coupling packet

Uprkos pažljivom proveravanju, ne možemo isključiti greške i ne preuzimamo nikakvu garanciju za navedene podatke.