K-VT BREIT MULTIFIX

Manifolds - wide design

Osobine

Ulazni pritisak	Max. 16 bar
Temperatura medija	max. 60 °C
Temperatura okoline	Max. 60 °C
Zaptivni materijal	NBR
Kućište	Die-cast zinc
Merenje vrednosti protoka	At P1 = 6 bar and pressure drop Δp = 1 bar



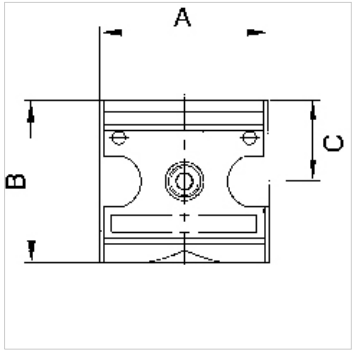

Napomena

Flow rate l/min at P → A

Ostali podaci na upit.

Opis

Wide or narrow, four-way manifolds.

Artikal

Naziv	Outlets	Navoj	Protok (L/min)	A (mm)	B	C (mm)	Konstrukciona veličina
K- 07 25 11 73	4 x 1/4	G 1/4	2500	47,8	52,0 mm	26,0	1
K- 07 25 11 74	4 x 1/4	G 3/8	2500	47,8	52,0 mm	26,0	1
K- 07 25 11 75	2 x 1/4, 2 x 1/2	G 1/2	11000	68,8	67,0 mm	33,5	2
K- 07 25 11 76	2 x 1/4, 2 x 1/2	G 3/4	11000	68,8	67,0 mm	33,5	2

Pribor

K-DRS WECHSELKONTAK ANFLANSCHBAR DS	Pressure switches, changeover type, suitable for flange mounting K-07302861
K-ZUBEH HANSA	Accessories for pressure switch HANSA

Rezervni delovi

K-KOPPELPAKET MEHR	Coupling packet
K-KOPPELPAKET SCHMA	Coupling packet

Uprkos pažljivom proveravanju, ne možemo isključiti greške i ne preuzimamo nikakvu garanciju za navedene podatke.