K-WTEH 2-TLG MET TROPF MULTIFIX MIN

Service units, 2-piece with metal bowl and metal sight dome

HANSA FLEX

Osobine

Ulazni pritisak	Max. 12 bar (also for metal tank!)
Temperatura medija	max. 60 °C
Temperatura okoline	Max. 60 °C
Širina pora u elementu filtera	5 µm
Zaptivni materijal	NBR
Poklopac opruge	POM-brass
Kućište	Die-cast zinc
Naglavak za kapljanje	PA (polycarbonate bowl), Zinc-glass-NBR (metal bowl)
Drain valve	Semi-automatic
Merenje vrednosti protoka	At P1 = 8 bar, P2 = 6 bar and pressure drop Δp = 1 bar

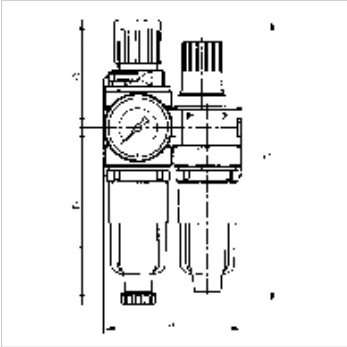

Napomena

Ostali podaci na upit.

Opis

Two or three-piece service units consisting of a diaphragm pressure regulator, independent of inlet pressure, with self-relieving design, combined with a centrifugal separator and a proportional lubricator.

Napomene u vezi porudžbine

Lockable service units available on request. If several devices in the »multifix-mini« Series are assembled together, the maximum working pressure is 12 bar.

Artikal

Naziv	Navoj	Opseg regulacije	Protok (L/min)	A (mm)	B	C (mm)	D (mm)	DN	Konstrukciona veličina
K- 07 25 01 26	G 1/8	0.5 - 10 bar	700	80,0	162,0 mm	63,0	99,0	5	0
K- 07 25 01 28	G 1/4	0.5 - 10 bar	700	80,0	162,0 mm	63,0	99,0	5	0

Rezervni delovi

K-HALTERBAUSATZ	Holder
K-AUTOMAT ABLASSVENTIL	Automatic drain valve
K-SCHALTTAFELMUTTER	Nut
K-KOPPELPAKET MEHR	Coupling packet
K-PC-BEHAELTER FILTER MULTIFIX	Polycarbonate tank filter
K-ERSATZBEHAELTER MULTI MINI	Spare tank »multifix-mini« & »standard-mini«
K-FILTERELEMENT	Filter element
K-VERSCHLEI-SATZ	Set of wearing parts
K-TROPFAUFSATZ POLYCARBO 1	Drip attachment polycarbonate
K-TROPFAUFSATZ METALL	Drip attachment metal

Uprkos pažljivom proveravanju, ne možemo isključiti greške i ne preuzimamo nikakvu garanciju za navedene podatke.