# K-FI PC-BEHAELTER H ABLV STANDARD

Filters with polycarbonate bowl and semi-automatic drain valve

## Osobine

| | |
|---|---|
| **Ulazni pritisak** | Max. 16 bar (polycarbonate bowl / bowl guard), Max. 25 bar (metal bowl) |
| **Temperatura medija** | max. 60 °C |
| **Temperatura okoline** | Max. 60 °C |
| **Širina pora u elementu filtera** | 5 µm (Size 1 / Size 3), 40 µm (Size 2 / Size 4), 60 µm (Size 5) |
| **Kućište** | Die-cast zinc, painted silver |
| **Merenje vrednosti protoka** | At P2 = 6 bar and pressure drop Δp = 1 bar |
| **Ostali podaci** | User manual on request |



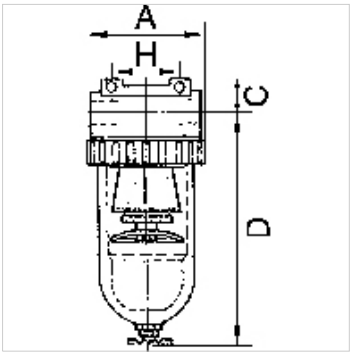


## Napomena

G 2 1/2 and G 3 filters available on request

## Opis

Centrifugal separators with a sintered filter element.

## Artikal

| Naziv | Navoj | Protok (L/min) | A (mm) | C (mm) | D (mm) | DN | H (mm) |
|---|---|---|---|---|---|---|---|
| **K- 07 25 05 85** | G 1/4 | 800 | 48,0 | 14,0 | 131,6 | 6 | 38,0 |
| **K- 07 25 05 88** | G 3/8 | 800 | 48,0 | 14,0 | 131,6 | 6 | 38,0 |
| **K- 07 25 05 91** | G 3/8 | 3100 | 70,0 | 16,0 | 145,7 | 10 | 50,0 |
| **K- 07 25 05 94** | G 1/2 | 4000 | 79,0 | 18,0 | 168,4 | 15 | 50,0 |
| **K- 07 25 05 97** | G 3/4 | 4000 | 102,0 | 26,5 | 169,9 | 20 | 50,0 |
| **K- 07 25 06 00** | G 1 | 4000 | 90,0 | 26,5 | 169,9 | 25 | 50,0 |
| **K- 07 25 06 03** | G 1 1/4 | 12500 | 125,0 | 36,5 | 243,4 | 40 | 105,0 |
| **K- 07 25 06 06** | G 1 1/2 | 12500 | 125,0 | 36,5 | 243,4 | 45 | 105,0 |

## Rezervni delovi

| | |
|---|---|
| **K-HALTERBAUSATZ STANDARD** | Holder |
| **K-FILTERELEMENT** | Filter element |
| **K-SCHUTZKORB G** | Protective cage |
| **K-AUTOMAT ABLASSVENTIL** | Automatic drain valve |
| **K-XV AGM MS NI** | Double nipples, parallel male thread, nickel-plated brass |
| **K-LOESBARE DOPPELNIPPEL MS** | Double nipples |
| **K-ABLASSVENTIL AUTO** | Fully-automatic drain valve with Adapter G 1/8 |

*Uprkos pažljivom proveravanju, ne možemo isključiti greške i ne preuzimamo nikakvu garanciju za navedene podatke.*