K-WTEH KOMBI PC-BEHAELTER H ABLV

Combination service units with polycarbonate bowl and manual drain valve

Osobine

Ulazni pritisak	Max. 16 bar (polycarbonate bowl), Max. 25 bar (metal bowl)
Temperatura medija	max. 50 °C
Temperatura okoline	Max. 50 °C
Širina pora u elementu filtera	50 µm
Zaptivni materijal	NBR
Kućište	Die-cast zinc, Spring bonnet; PA
Naglavak za kapljanje	PA
Merenje vrednosti protoka	At P1 = 8 bar, P2 = 6 bar and pressure drop Δp = 1 bar



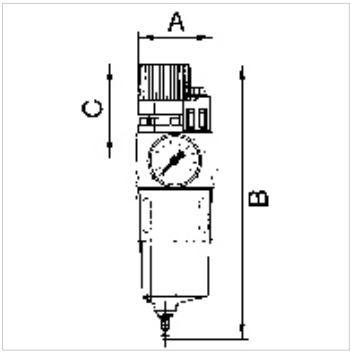

Napomena

Ostali podaci na upit.

Opis

A filter, pressure regulator and oil-mist lubricator combined in a single device with an extremely compact design. The pressure setting can be locked by pushing the knob down. Oil can be filled under pressure.

Artikal

Naziv	Navoj	Opseg regulacije	Protok (L/min)	A (mm)	B	C (mm)
K- 07 25 08 44	G 1/4	0.5 - 10 bar	1400	67,0	217,0 mm	68,5
K- 07 25 08 46	G 1/4	0.5 - 16 bar	1000	67,0	217,0 mm	68,5
K- 07 25 08 48	G 3/8	0.5 - 10 bar	1400	67,0	217,0 mm	68,5
K- 07 25 08 50	G 3/8	0.5 - 16 bar	1000	67,0	217,0 mm	68,5
K- 07 25 08 52	G 1/2	0.5 - 10 bar	1400	65,0	217,0 mm	68,5
K- 07 25 08 54	G 1/2	0.5 - 16 bar	1000	65,0	217,0 mm	68,5
K- 07 25 08 56	G 3/4	0.5 - 10 bar	3400	97,0	296,5 mm	96,5
K- 07 25 08 58	G 3/4	0.5 - 16 bar	2800	97,0	296,5 mm	96,5
K- 07 25 08 60	G 1	0.5 - 10 bar	3400	93,0	296,5 mm	96,5
K- 07 25 08 62	G 1	0.5 - 16 bar	2800	93,0	296,5 mm	96,5

Rezervni delovi

K-HALTERBAUSATZ SERIE 81	Holder for series 81
K-ERSATZBEHAEL KOMBI	Spare tank
K-SCHUTZKORB G	Protective cage
K-VERSCHLEI-SATZ	Set of wearing parts
K-TROPFAUFSATZ POLYCARBO	Drip attachment polycarbonate
K-TROPFAUFSATZ METALL	Drip attachment metal
K-FILTERELEMENT	Filter element
K-ABLASSVENTIL AUTO	Fully-automatic drain valve with Adapter G 1/8
K-RD NIPPEL KURZ 1	Reducing nipples, short type
K-XV AGM 2	Double nipples, parallel male thread

Uprkos pažljivom proveravanju, ne možemo isključiti greške i ne preuzimamo nikakvu garanciju za navedene podatke.