K-FI SPEZI PC-BEHAELTER H STANDAD

Special filters with polycarbonate bowl, with semi-automatic drain valve to G 1/2 and manual drain valve from G 3/4

Osobine

Ulazni pritisak	Max. 16 bar (polycarbonate bowl / bowl guard), Max. 25 bar (metal bowl)
Temperatura medija	max. 50 °C
Temperatura okoline	Max. 50 °C
Stepen dejstva	99.999 %
Širina pora u elementu filtera	0.01 µm
Kućište	Die-cast zinc, painted silver
Merenje vrednosti protoka	At P2 = 6 bar and pressure drop Δp = 1 bar



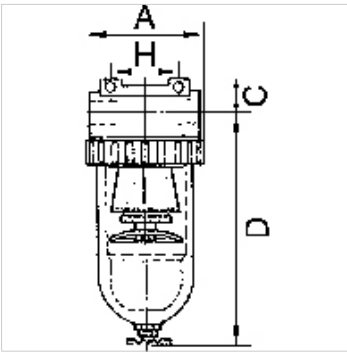

Napomena

Ostali podaci na upit.

Opis

For all applications with particularly strict compressed air purity requirements. The separating efficiency of these filters permits very fine oil vapour particles and micro-fine suspended particles to be filtered. A standard filter should always be connected upstream to trap coarse impurities and protect the micro-filter inserts.

Artikal

Naziv	Navoj	Protok (L/min)	A (mm)	C (mm)	D (mm)	H (mm)	DN
K- 07 25 10 76	G 3/8	380	48,0	14,0	131,6	38,0	6
K- 07 25 10 83	G 3/4	7000	133,0	36,0	206,0	134,0	20
K- 07 25 10 86	G 1	7000	133,0	36,0	206,0	120,0	25

Rezervni delovi

K-HALTERBAUSATZ STANDARD	Holder
K-FILTERELEMENT STANDARD	Filter element
K-SCHUTZKORB G	Protective cage
K-XV AGM MS NI	Double nipples, parallel male thread, nickel-plated brass
K-LOESBARE DOPPELNIPPEL MS	Double nipples

Uprkos pažljivom proveravanju, ne možemo isključiti greške i ne preuzimamo nikakvu garanciju za navedene podatke.