K-FI REGL METALLBEHAE S MANO VARIOB

Filter regulators with metal bowl, incl. sight glass and pressure gauge

HANSA FLEX

Osobine

Ulazni pritisak	Max. 16 bar (polycarbonate bowl), Max. 20 bar (metal bowl)
Temperatura medija	max. 50 °C
Temperatura okoline	Max. 50 °C (polycarbonate bowl), Max. 80 °C (metal bowl)
Širina pora u elementu filtera	40 µm
Zaptivni materijal	NBR
Poklopac opruge	POM
Kućište	Die-cast zinc
Membrana	NBR
Drain valve	Manual
Merenje vrednosti protoka	At P1 = 10 bar, P2 = 6 bar and pressure drop Δp = 1 bar



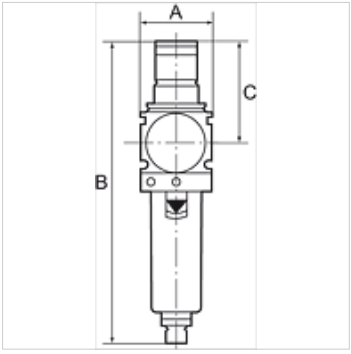

Napomena

Ostali podaci na upit.

Opis

Reversible diaphragm pressure regulators, independent of inlet pressure, with self-relieving design, combined with a centrifugal separator. The pressure setting can be locked by pushing the knob down. Approved series in modern industrial design, with the following key benefits: Simple handling, Convenient modular assembly thanks to innovative fasteners, Excellent flow values.

Napomene u vezi porudžbine

Filter regulators are also available with bowl guard or metal bowl. Filter regulators are also available in lockable version. Please ask for more information.

Dodatne informacije

Filter regulators are also available with bowl guard or metal bowl. Filter regulators are also available in lockable version. Please ask for more information.

Artikal

Naziv	Navoj	Opseg regulacije	Protok (L/min)	A (mm)	B	C (mm)
K- 07 25 06 86	G 1/4	0.5 - 10 bar	2000	48,0	203,0 mm	68,0
K- 07 25 06 88	G 3/8	0.5 - 10 bar	3000	48,0	203,0 mm	68,0
K- 07 25 06 90	G 1/2	0.5 - 10 bar	5500	70,0	273,0 mm	98,0
K- 07 25 06 92	G 3/4	0.5 - 10 bar	6500	70,0	273,0 mm	98,0
K- 07 25 06 94	G 1	0.5 - 10 bar	6500	124,0	273,0 mm	98,0

Rezervni delovi

K-VERSCHLEI-SATZ VARIOBLOC	Set of wearing parts
K-ERSATZBEHAELTER VARIOBLOC POLY	Spare tank Polycarbonat
K-FILTERELEMENT VARIOBLOC	Filter element
K-ABLASSVENTIL AUTO	Fully-automatic drain valve with Adapter G 1/8

Uprkos pažljivom proveravanju, ne možemo isključiti greške i ne preuzimamo nikakvu garanciju za navedene podatke.