K-WTEH 3-TLG PC-BEHAEL VARIOBLOC

Service units, 3-piece with polycarbonate bowl

HANSA-FLEX

Osobine

Ulazni pritisak	Max. 16 bar (polycarbonate bowl), Max. 20 bar (metal bowl)
Temperatura medija	max. 50 °C
Temperatura okoline	Max. 50 °C (polycarbonate bowl), Max. 80 °C (metal bowl)
Širina pora u elementu filtera	40 µm
Zaptivni materijal	NBR
Poklopac opruge	POM
Kućište	Die-cast zinc
Membrana	NBR
Naglavak za kapljanje	PA
Drain valve	Manual
Merenje vrednosti protoka	At P1 = 10 bar, P2 = 6 bar and pressure drop Δp = 1 bar



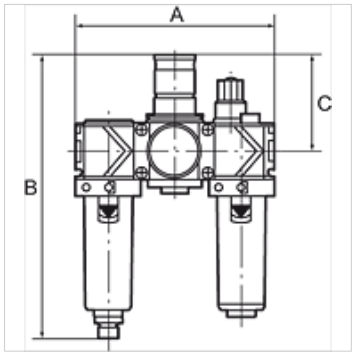

Napomena

Ostali podaci na upit.

Opis

Two or three-piece service units consisting of a reversible diaphragm pressure regulator, independent of inlet pressure, with self-relieving design, combined with a centrifugal separator and a proportional lubricator. Approved series in modern industrial design, with the following key benefits: Simple handling, Convenient modular assembly thanks to innovative fasteners, Excellent flow values.

Napomene u vezi porudžbine

Service units are also available with bowl guard or metal bowl. Service units are also available in other control ranges (0.5 - 6 bar and 0.5 - 16 bar) and in lockable version. Please ask for more information.

Dodatne informacije

Service units are also available with bowl guard or metal bowl. Service units are also available in other control ranges.

Artikal

Naziv	Navoj	Opseg regulacije	Protok (L/min)	A (mm)	B	C (mm)
K- 07 25 14 11	G 1/4	0.5 - 10 bar	1500	144,0	201,0 mm	68,0
K- 07 25 14 13	G 3/8	0.5 - 10 bar	1800	144,0	201,0 mm	68,0
K- 07 25 14 15	G 1/2	0.5 - 10 bar	3400	210,0	247,0 mm	98,0
K- 07 25 14 17	G 3/4	0.5 - 10 bar	5000	210,0	247,0 mm	98,0
K- 07 25 14 19	G 1	0.5 - 10 bar	5000	264,0	247,0 mm	98,0

Rezervni delovi

K-VERSCHLEI-SATZ VARIOBLOC	Set of wearing parts
K-FILTERELEMENT VARIOBLOC	Filter element
K-TROPFAUFSATZ VARIOBLOC	Drip attachment
K-ERSATZBEHAELTER VARIOBLOC POLY	Spare tank Polycarbonat
K-ABLASSVENTIL AUTO	Fully-automatic drain valve with Adapter G 1/8
K-TROPFAUFSATZ METALL	Drip attachment metal

Uprkos pažljivom proveravanju, ne možemo isključiti greške i ne preuzimamo nikakvu garanciju za navedene podatke.