K-HS RD

Unidirectional banjo valves, pneumatic release, port 2 with female thread

Osobine

Radni pritisak	0.3 - 10 bar
Upravljački pritisak	0.5 - 2.5 bar, depending on operating pressure
Temperatura medija	max. 60 °C
Položaj ugradnje	Any. The ring piece must be positioned before the valve is tightened
Materijal	Mesing, niklovan
Zaptivni materijal	Perbunan



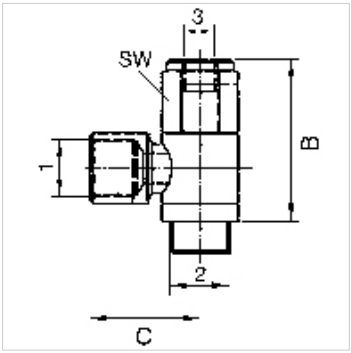

Napomena

Ostali podaci na upit.

Opis

For stopping and positioning the cylinder movement: If a control signal is present at port 3 (see drawing), air can flow to and from the cylinder. If no control signal is present, the cylinder exhaust air is shut off by the unidirectional valve.
The cylinder is stopped. Releasable unidirectional valves are screwed directly onto the cylinder instead of the normal pipe connections.

Artikal

Naziv	Port 1	Port 2	Priključak 3	B (mm)	C (mm)
K- 07 15 07 04	G 1/8	G 1/8	M 5	38,0	21,5
K- 07 15 07 03	G 1/4	G 1/4	G 1/8	43,0	25,4
K- 07 15 07 05	G 3/8	G 3/8	G 1/8	46,0	31,6
K- 07 15 07 02	G 1/2	G 1/2	G 1/8	52,0	32,0

Uprkos pažljivom proveravanju, ne možemo isključiti greške i ne preuzimamo nikakvu garanciju za navedene podatke.