K-KDR STECK

Mini pressure regulators, discharge port on thread, plug-in connector

Osobine

Opseg regulacije	0 - 8 bar
Ulazni pritisak	Max. 10 bar
Temperaturni opseg	0 °C to +70 °C
Šuplji zavrtanj, obrtni rukavac, zavrtanj za regulaciju	Nickel-plated brass
Unutrašnji delovi	Brass with a bare metal surface
Zaptivka O-prstena	NBR
Zaptivke (sa osiguračem)	Polyamide (glass fibre-reinforced)



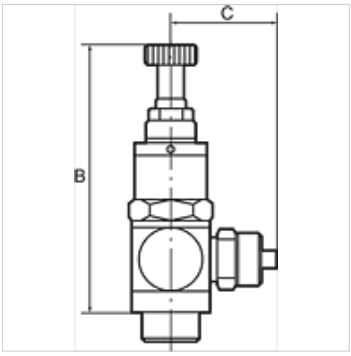

Napomena

Ostali podaci na upit.

Opis

Piston pressure regulator with self-relieving design, hollow bolt and pivoting ring piece. The regulator is screwed directly into the consumer (e.g. cylinder, handling equipment, etc.). The working pressure can thus be adapted to the specific application.

Artikal

Naziv	C (mm)	za crevo	Navoj	SW	B (mm)
K- 07 25 08 40	19,5	4 mm	G 1/8	15 mm	56,0
K- 07 25 08 41	22,0	6 mm	G 1/8	15 mm	56,0
K- 07 25 08 42	22,5	8 mm	G 1/8	15 mm	56,0
K- 07 25 08 38	23,5	6 mm	G 1/4	17 mm	63,0
K- 07 25 08 39	24,0	8 mm	G 1/4	17 mm	63,0
K- 07 25 08 37	26,5	10 mm	G 1/4	17 mm	63,0

Uprkos pažljivom proveravanju, ne možemo isključiti greške i ne preuzimamo nikakvu garanciju za navedene podatke.