K-STOPPVENTILE STECK

Stop valves, ports 2 and 3 with plug connection

Osobine

Radni pritisak	Max. 10 bar
Upravljački pritisak	1 - 5 bar, depending on operating pressure
Temperatura medija	max. 70 °C
Položaj ugradnje	Any. Ring pieces can still be rotated 360° after the valve has been tightened
Zaptivni materijal	Perbunan



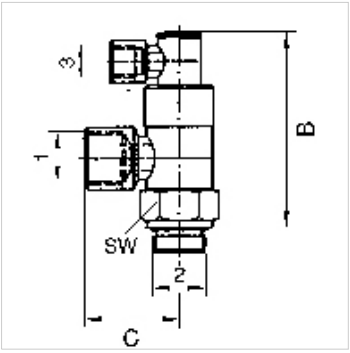

Napomena

Ostali podaci na upit.

Opis

For high-speed positioning and stop functions as well as emergency switching (e.g. emergency stop). If a control signal is present at port 3, air can flow to and from the cylinder. If no control signal is present, the air flow to and from the cylinder is shut off, causing the cylinder to stop in the required position. Stop valves are screwed directly onto the cylinder instead of the normal pipe connections.

Artikal

Naziv	Port 1	Port 2	Priključak 3	Materijal	B (mm)	C (mm)
K- 07 15 20 50	G 1/8	6 mm	4 mm	Nickel-plated brass	52,0	25,0
K- 07 15 20 49	G 1/4	6 mm	4 mm	Nickel-plated brass	58,0	28,0
K- 07 15 20 51	G 3/8	8 mm	4 mm	Nickel-plated brass	63,0	32,0
K- 07 15 20 48	G 1/2	12 mm	4 mm	Nickel-plated brass	72,0	41,0

Uprkos pažljivom proveravanju, ne možemo isključiti greške i ne preuzimamo nikakvu garanciju za navedene podatke.